SDLS210 – DECEMBER 1983 – REVISED MARCH 1988

- **Package Options Include Ceramic Chip Carriers and Flat Packages in Addition to Plastic and Ceramic DIPs**
- **Dependable Texas Instruments Quality and Reliability**

description

These devices contain two independent 4-input positive-NAND 50-ohm line drivers. They perform the Boolean function $Y = \overline{ABCD}$.

The SN54S140 is characterized for operation over the full military temperature range of −55°C to 125°C. The SN74S140 is characterized for operation from 0°C to 70°C.

SN54S140 . . . J OR W PACKAGE
SN74S140 . . . D OR N PACKAGE
(TOP VIEW)

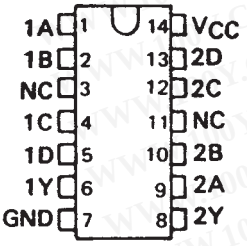

SN54S140 . . . FK PACKAGE
(TOP VIEW)

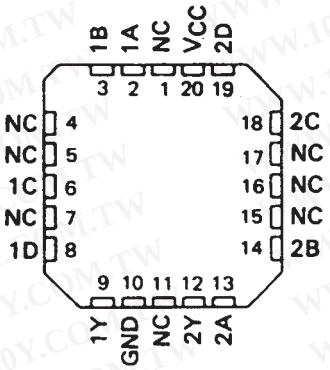

NC—No internal connection

logic diagram (each driver)

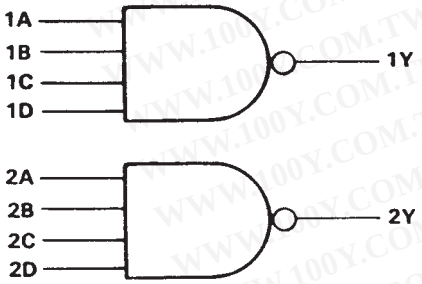

logic symbol†

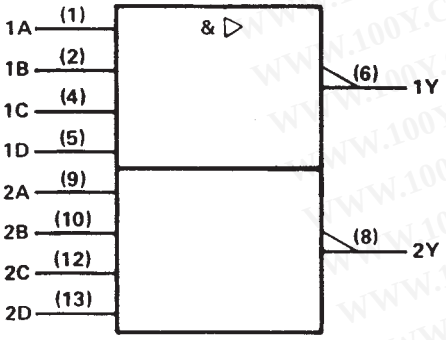

†This symbol is in accordance with ANSI/IEEE Std. 91-1984 and IEC Publication 617-12.
Pin numbers shown are for D, J, N, and W packages.

schematic (each driver)

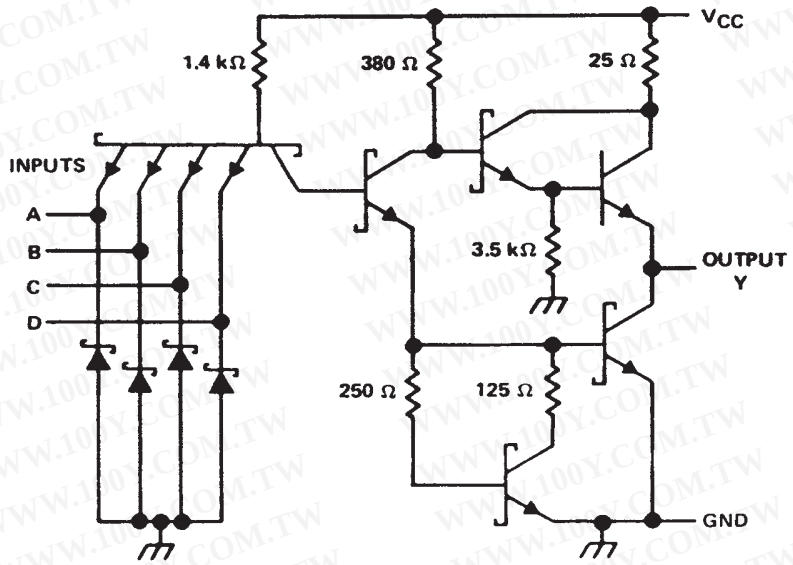

Resistor values shown are nominal.

absolute maximum ratings over operating free-air temperature range (unless otherwise noted)

Supply voltage, V_{CC} (see Note 1)	7 V
Input voltage	5.5 V
Operating free-air temperature range: SN54′	−55°C to 125°C
SN74′	0°C to 70°C
Storage temperature range	−65°C to 150°C

NOTE 1: Voltage values are with respect to network ground terminal.

recommended operating conditions

		SN54S140			SN74S140			UNIT
		MIN	NOM	MAX	MIN	NOM	MAX	
V_{CC}	Supply voltage	4.5	5	5.5	4.75	5	5.25	V
V_{IH}	High-level input voltage	2			2			V
V_{IL}	Low-level input voltage			0.8			0.8	V
I_{OH}	High-level output current			– 40			– 40	mA
I_{OL}	Low-level output current			60			60	mA
T_A	Operating free-air temperature	– 55		125	0		70	°C

electrical characteristics over recommended operating free-air temperature range (unless otherwise noted)

PARAMETER	TEST CONDITIONS†			SN54S140			SN74S140			UNIT
				MIN	TYP‡	MAX	MIN	TYP‡	MAX	
V_{IK}	V_{CC} = MIN,	I_I = – 18 mA				– 1.2			– 1.2	V
V_{OH}	V_{CC} = MIN,	V_{IL} = 0.8 V,	I_{OH} = – 3 mA	2.5	3.4		2.7	3.4		V
	V_{CC} = MIN,	V_{IL} = 0.5 V,	R_O = 50 Ω to GND	2			2			
V_{OL}	V_{CC} = MIN,	V_{IH} = 2 V,	I_{OL} = 60 mA			0.5			0.5	V
I_I	V_{CC} = MAX,	V_I = 5.5 V				1			1	mA
I_{IH}	V_{CC} = MAX,	V_{IH} = 2.7 V				0.1			0.1	mA
I_{IL}	V_{CC} = MAX,	V_{IL} = 0.5 V				– 4			– 4	mA
I_{OS}§	V_{CC} = MAX			– 50		– 225	– 50		– 225	mA
I_{CCH}	V_{CC} = MAX,	V_I = 0 V			10	18		10	18	mA
I_{CCL}	V_{CC} = MAX,	V_I = 4.5 V			25	44		25	44	mA

† For conditions shown as MIN or MAX, use the appropriate value specified under recommended operating conditions.
‡ All typical values are at V_{CC} = 5 V, T_A = 25°C.
§ Not more than one output should be shorted at a time, and the duration of the short circuit should not exceed 100 milliseconds.

switching characteristics, V_{CC} = 5 V, T_A = 25°C (see note 2)

PARAMETER	FROM (INPUT)	TO (OUTPUT)	TEST CONDITIONS		MIN	TYP	MAX	UNIT
t_{PLH}	Any	Y	R_L = 93 Ω,	C_L = 50 pF		4	6.5	ns
t_{PHL}						4	6.5	ns
t_{PLH}			R_L = 93 Ω,	C_L = 150 pF		6		ns
t_{PHL}						6		ns

NOTE 2: Load circuits and voltage waveforms are shown in Section 1.