Semiconductors

UM10045_1

ISP1363 OTG Add-On Eval Kit with Intel® PXA250 Integrated Development Platform

September 2003

User's Guide

Rev. 1.0

Revision History:

Version	Date	Description	Author
1.0	Aug 2003	First release.	David Wang

PHILIPS

This is a legal agreement between you (either an individual or an entity) and Philips Semiconductors. By accepting this product, you indicate your agreement to the disclaimer specified as follows:

DISCLAIMER

PRODUCT IS DEEMED ACCEPTED BY RECIPIENT. THE PRODUCT IS PROVIDED "AS IS" WITHOUT WARRANTY OF ANY KIND. TO THE MAXIMUM EXTENT PERMITTED BY APPLICABLE LAW, PHILIPS SEMICONDUCTORS FURTHER DISCLAIMS ALL WARRANTIES, INCLUDING WITHOUT LIMITATION ANY IMPLIED WARRANTIES OF MERCHANT ABILITY, FITNESS FOR A PARTICULAR PURPOSE, AND NONINFRINGEMENT. THE ENTIRE RISK ARISING OUT OF THE USE OR PERFORMANCE OF THE PRODUCT AND DOCUMENTATION REMAINS WITH THE RECIPIENT. TO THE MAXIMUM EXTENT PERMITTED BY APPLICABLE LAW, IN NO EVENT SHALL PHILIPS SEMICONDUCTORS OR ITS SUPPLIERS BE LIABLE FOR ANY CONSEQUENTIAL, INCIDENTAL, DIRECT, INDIRECT, SPECIAL, PUNITIVE, OR OTHER DAMAGES WHATSOEVER (INCLUDING, WITHOUT LIMITATION, DAMAGES FOR LOSS OF BUSINESS PROFITS, BUSINESS INTERRUPTION, LOSS OF BUSINESS INFORMATION, OR OTHER PECUNIARY LOSS) ARISING OUT OF THIS AGREEMENT OR THE USE OF OR INABILITY TO USE THE PRODUCT, EVEN IF PHILIPS SEMICONDUCTORS HAS BEEN ADVISED OF THE POSSIBILITY OF SUCH DAMAGES.

CONTENTS

FIGURES

TABLES

1. Introduction

The ISP1363 is a single-chip Universal Serial Bus (USB) On-The-Go (OTG) Controller, Host Controller (HC) and Device Controller (DC).

- The OTG Controller is fully compliant with *On-The-Go Supplement to the USB 2.0 Specification Rev. 1.0a*.
- The Host Controller is fully compliant with *Universal Serial Bus Specification Rev. 2.0*; supporting data transfer at full-speed (12 Mbit/s) and low-speed (1.5 Mbit/s).
- The Device Controller is also fully compliant with *Universal Serial Bus Specification Rev. 2.0*; supporting data transfer at full-speed (12 Mbit/s).

The target applications of the ISP1363 are embedded systems, portable devices, digital still cameras, and so on. ISP1363 has a 16-bit data bus for interfacing with a microprocessor and separate I/O addresses.

The ISP1363 evaluation kit with PXA250 is a standalone embedded system evaluation kit. Using the popular Intel® PXA250, this kit can fully utilize the bandwidth of the ISP1363.

To shorten the development time for customers, Philips has partnered with Accelent to bring about an OTG add-on evaluation kit with Intel PXA250 IDP. During the initial partnership, Accelent had provided IDP revision 2.0. Over time, however, Accelent upgraded its IDP to revision 4.0. For detailed information on the changes, refer to Accelent document *PX2-IDP Spin 2 Revision Status* (PX2-IDP - Spin 2 RevSts.pdf).

Note: Before you use the Integrated Development Platform (IDP), read *Intel PXA250 Applications Processor Integrated Development Platform* (linux_user_guide_EUG-0004-0001B.pdf) User's Guide from Accelent.

Figure 1-1 and Figure 1-2 show the ISP1363 OTG add-on card for PXA250 IDP.

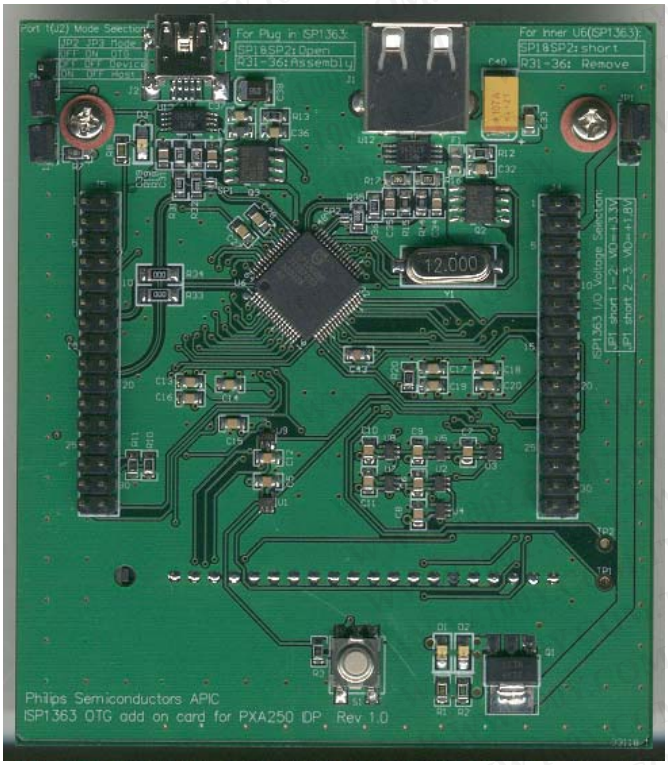

Figure 1-1: Top View of the ISP1363 OTG Add-On Card for PXA250 IDP

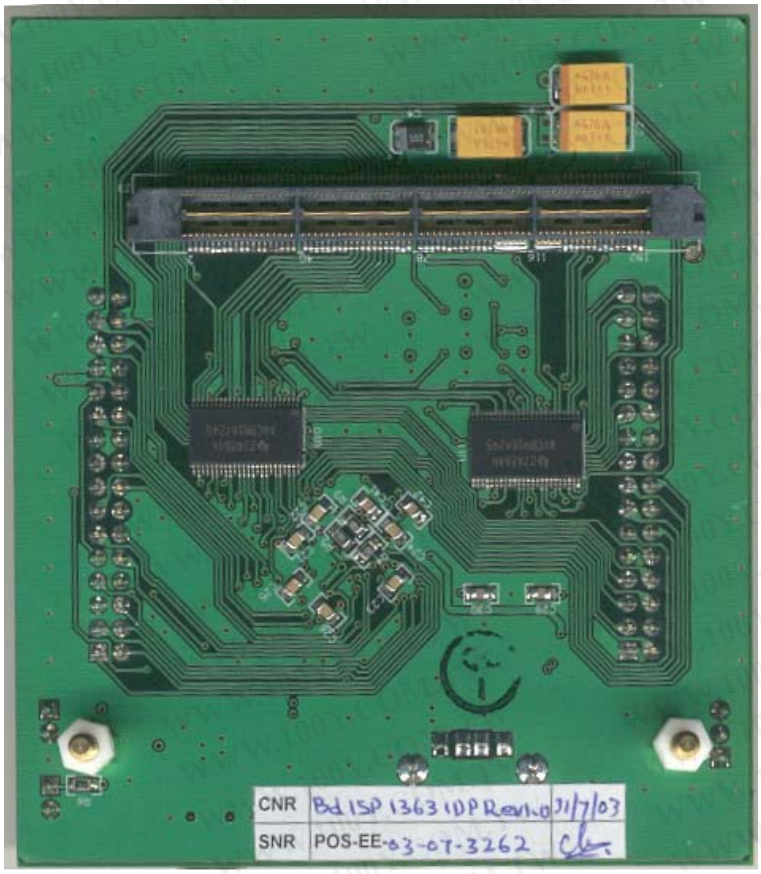

Figure 1-2: Bottom View of the ISP1363 OTG Add-On Card for PXA250 IDP

2. System Requirements

1. Two Accelent Linux IDP boards (version 2 or later) with the ISP1363 OTG add-on cards attached.
2. One OTG cable.
3. A USB speaker.

Figure 2-1: Accelent IDP Version 2

Figure 2-2: Accelent IDP Version 4

3. Installation

1. Copy the nk.bin file to a CompactFlash® (CF) memory unit, and firmly insert the ISP1363 OTG add-on card for the PXA250 IDP into connector J13 on the Accelent IDP board.
2. Insert a PC card adapter with CF into either of the PC card slots in the Accelent IDP.
3. Switch ON the Accelent IDP, and wait for the CF memory to be reprogrammed.

4. Eject the PC card to reboot the Accelent IDP.

The ISP1363 evaluation kit with PXA250 IDP is now ready for testing.

For information on other ways to program the CF unit in Accelent IDP, refer to Accelent document *Intel PXA250 Applications Processor Integrated Development Platform*.

3.1. Setting Up the Integrated Development Platform (IDP)

1. Boot the PXA250 IDP.
2. Follow the instructions according to the operating system installed on the IDP.

Figure 3-1 shows a setup of the ISP1363 OTG add-on card for PXA250 IDP.

Note: To play an MP3 file on an IDP, make sure the file is first uploaded to the IDP through the Ethernet. For information on how to upload a file, refer to Accelent document *Intel PXA250 Applications Processor Integrated Development Platform*.

Figure 3-1: Setup of the ISP1363 OTG Add-On Card for PXA250 IDP

3.2. Power Supply and LED Indicators

In the ISP1363 OTG add-on evaluation card, the power supply inputs—+3.3 V and +5.0 V—come from the IDP. Therefore, no other external power supply input is required. The on-board 3.3 V-to-1.8 V regulator provides the 1.8 V power supply to $V_{I/O}$ of the ISP1363.

There are LEDs on the board to indicate the power supply status:

- D1 is the +3.3 V indicator.
- D2 is the +5.0 V indicator.
- D3 is the GoodLink™ indicator for the Device Controller of the ISP1363.

3.3. Connectors and Jumpers

The ISP1363 OTG add-on card contains an OTG mini-AB connector (J2) and a USB downstream port connector (J1) to interface with other USB peripherals. Jumpers JP2 and JP3 set the operation mode of OTG port. JP1 sets the $V_{I/O}$ voltage for the ISP1363.

There is also a reset switch (S1) for the hardware reset of the ISP1363.

Table 3-1 shows the jumper settings that must be configured before using the ISP1363 OTG add-on card.

Table 3-1: Jumper Settings

Jumper	Description	Setting		
JP1	$V_{I/O}$ voltage select	Short <1–2>: $V_{I/O}$ = +3.3 V Short <2–3>: $V_{I/O}$ = +1.8 V		
JP2, JP3	OTG port (J2) mode select	**JP2**	**JP3**	**J2 MODE**
		Open	Short	OTG
		Open	Open	Peripheral
		Short	Open	Host

4. ISP1363 Bill of Materials

Quantity	Part Reference	Description	Value	Rating	Manufacturer
8	C5, C6, C7, C8, C9, C10, C11, C12,	Capacitor, SMD MLC, 0.01 µF, ±10% 50 V NPO/X7R, 0805	0.01 µF	50 V	Generic
20	C13, C14, C15, C16, C17, C18, C19, C20, C21, C22, C23, C24, C25, C26, C27, C28, C32, C33, C36, C37,	Capacitor, SMD MLC, 0.1µF, ±10% 16 V X7R, 0805	0.1 µF	50 V	Generic
2	C29, C30	Capacitor, SMD MLC, 22 pF, ±10% 50 V NPO/X7R, 0805	22 pF	50 V	Generic
7	C31, C34, C35, C39, C41, C42, C43	Capacitor, SMD, NPO/X7R 47 pF, ±10% 50 V 0805	47 pF	50 V	Generic
2	C4, C38	Capacitor SMD, tantalum chip, 4.7 µF, 16 V, TAJ B-CASE	4.7 µF	20 V	AVX
3	C1, C2, C3	Capacitor SMD, tantalum chip, 47 µF, 16 V, TAJ D-CASE	47 µF	16 V	AVX
1	C40	Capacitor SMD, tantalum chip, 100 µF, 16 V, TAJ D-CASE	100 µF	16 V	AVX
1	U6	ISP1363BD USB OTG Controller. Package: LQFP64	—	—	Philips
2	JP2, JP3	Header – 1 x 2 .025SQ PIN .100 centers	—	—	Generic
1	JP1	Header – 2 x 3 .025SQ PIN .100 centers	—	—	Generic
2	J4, J5	Header – 16 x 2 .025SQ PIN .100 centers	—	—	Generic
1	J3	High-speed terminal, MIT series, 50 Ω, 152 contact, 0.025 in spacing, 8 mm board spacing, P/N: MIT-076-02-L-D	—	—	Samtec
1	J1	USB Type A connector, no panel grounding ears	—	—	Tyco/Amp
1	J2	USB Mini-AB connector, surface mount	—	—	Acon
2	U12, U13	Diode SMD, Dual USB transient suppressor. P/N: SN75240PW	—	—	Texas instruments
2	F1, F2	Ferrite bead, SMD, with copper pattern heat sink. P/N: BLM21P221SG	—	0805	muRata electronics
3	M1, M2, M3,	Shunt, single position, .100 center, black	—	—	Samtec
1	S1	Switch, SMD, momentary, NO, w/ground tab	—	—	Omron
4	U2, U3, U5, U8	IC SMD single OR gate, SC70 5 lead. P/N: NC7SZ32P5	—	—	Fairchild
1	U1	IC SMD single AND gate, SC70 5 lead. P/N: NC7SZ08P5	—	—	Fairchild

Quantity	Part Reference	Description	Value	Rating	Manufacturer
2	U4, U7, U9	IC SMD single inverter gate, SC70 5 lead. P/N: NC7SZ04P5	—	—	Fairchild
2	U10, U11	16-bit dual-supply bus transceiver. P/N: 74AVCBH164245GR			Texas instruments
2	D1, D2	LED SMT 0805 red	—	—	Lumex
1	D3	LED SMT 0805 green	—	—	Lumex
4	R31, R32, R35, R36	Film chip resistor, ±5%	0	0805	Generic
2	R33, R34	Film chip resistor, ±5%	0	1206	Generic
2	R14, R15	Film chip resistor, ±5%	18	0805	Generic
2	R18, R19	Film chip resistor, ±5%	27	0805	Generic
5	R3, R10, R11, R12, R13	Film chip resistor, ±5%	10 K	0805	Generic
4	R4, R5, R7, R9	Film chip resistor, ±5%	100 K	0805	Generic
2	R16, R17	Film chip resistor, ±5%	15 K	0805	Generic
2	R1, R8	Film chip resistor, ±5%	470	0805	Generic
2	R6, R20	Film chip resistor, ±5%	47 K	0805	Generic
1	R2	Film chip resistor, ±5%	680	0805	Generic
2	Q2, Q3	MOSFET, P-channel, P/N: NDS9435A	—	—	Fairchild
1	Q1	1.8V voltage regulator, SOT-223. P/N: LM1117-1.8			National Semi
1	Y1	12 MHZ, SM, crystal	—	—	Citizen
1	PCB, Philips ISP1363 OTG add on card for PXA250 IDP, Rev 1.0				

5. ISP1363 OTG Add-On Evaluation Card Schematics

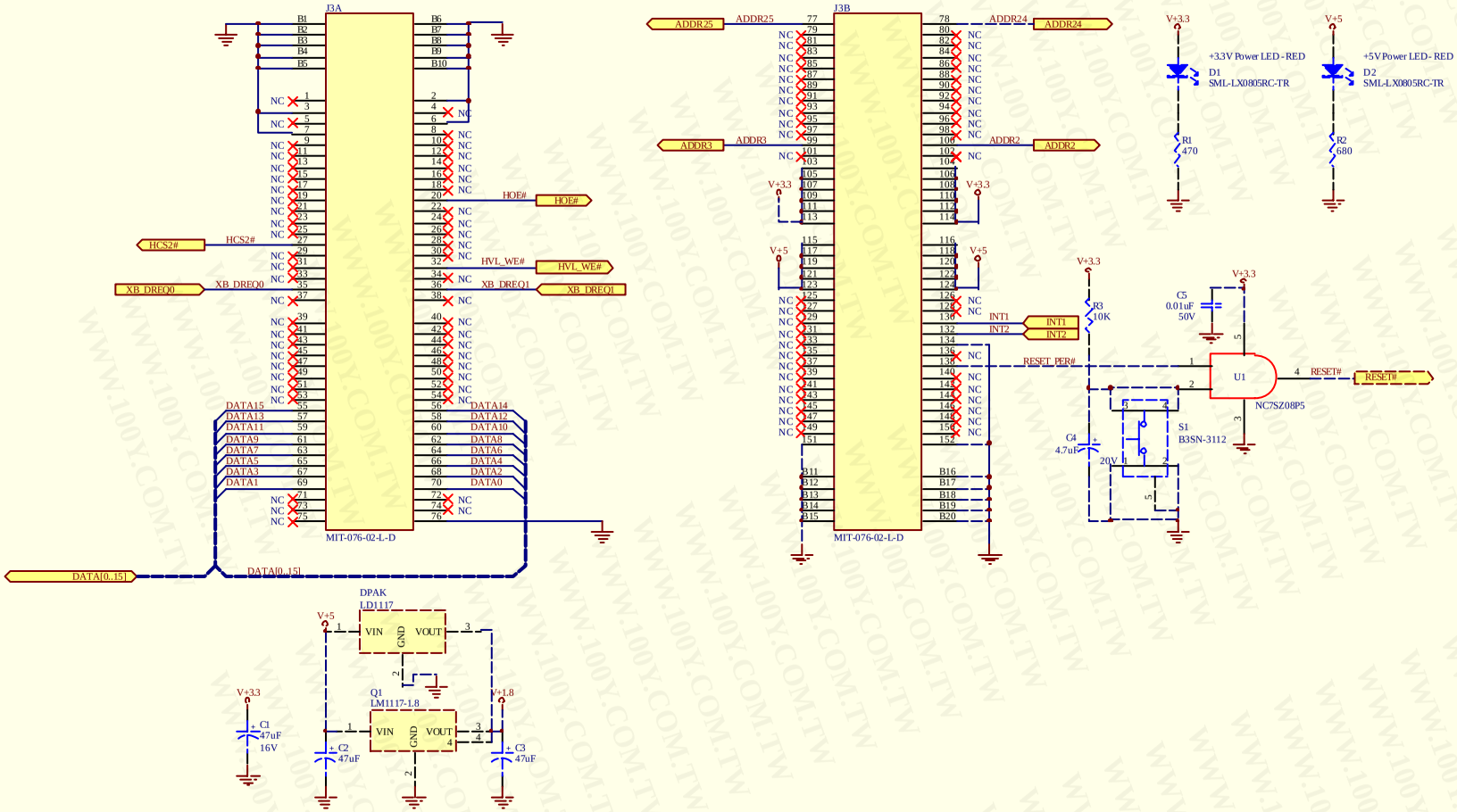

Title
ISP1363 USB OTG Expansion Board for Accelent IDP

Size	Number	Revision
B		Rev1.0

Date: 6-Aug-2003 Sheet of SHEET 1 OF 3

File: D:\wzw\Myproj\isp1363\eva_kit\IDP kit\pcb\IDP64.Pcb

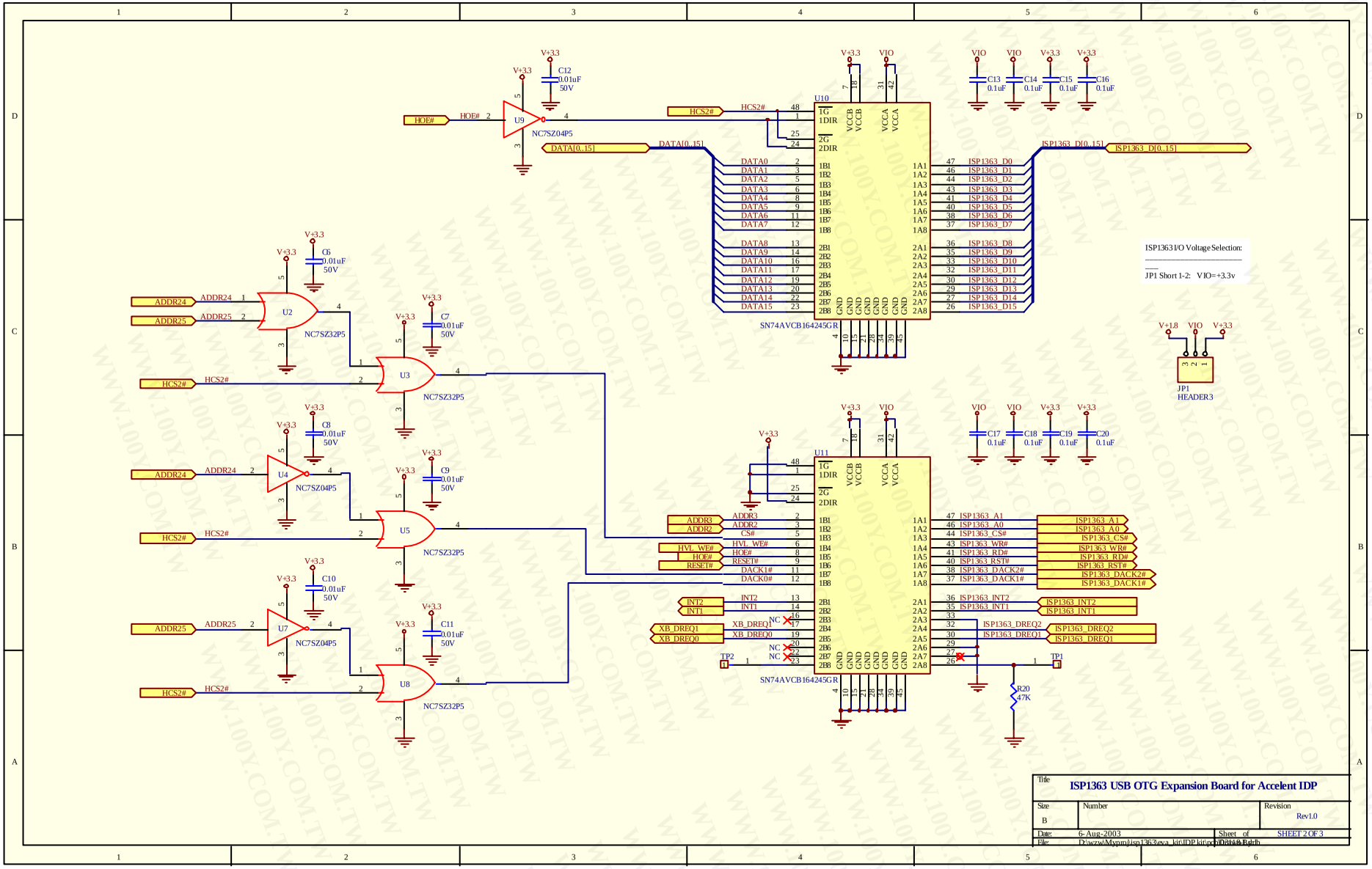

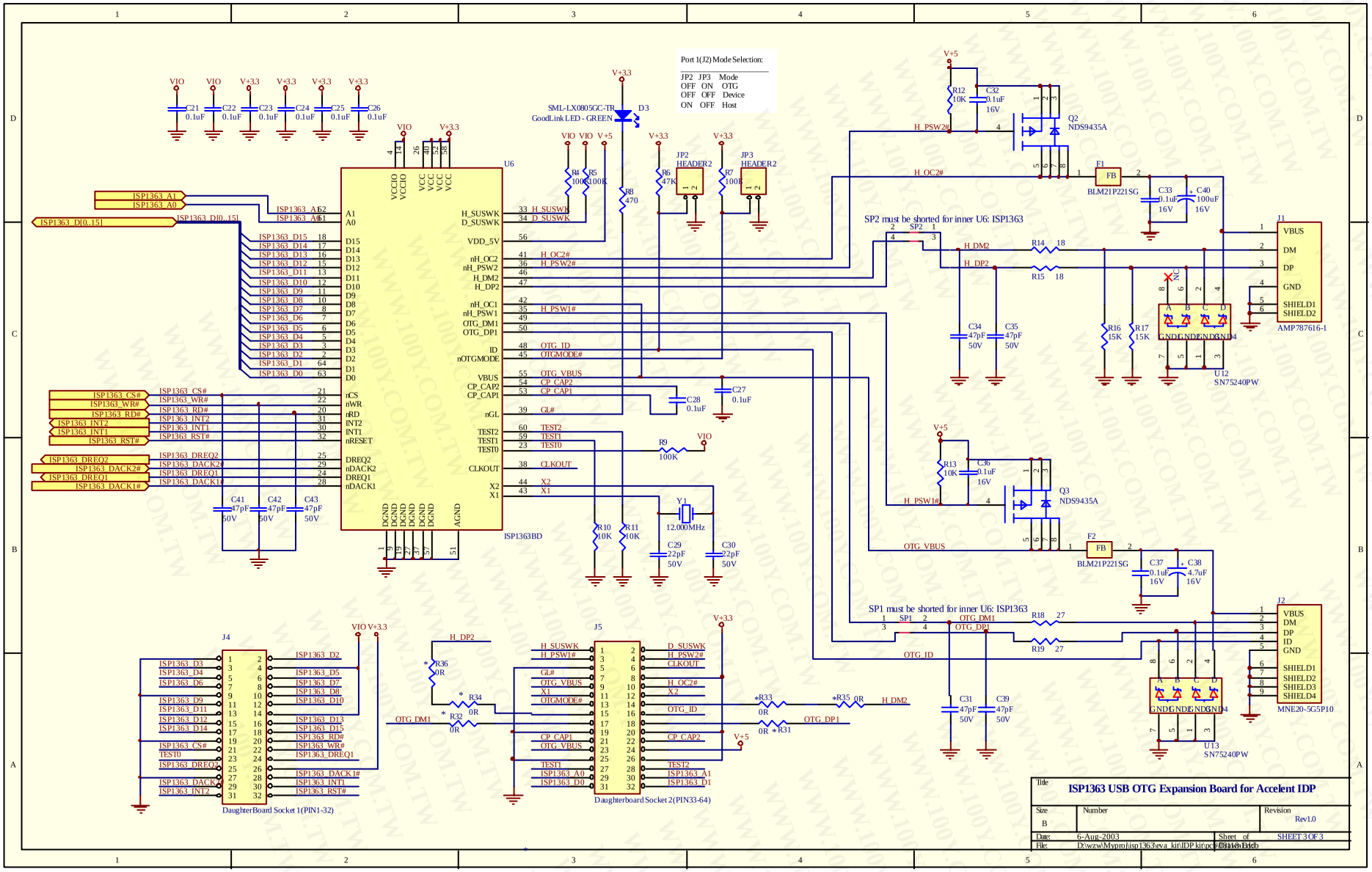

6. References

- *ISP1363 Low-power single-chip Universal Serial Bus On-The-Go Controller* data sheet
- *ISP1362 Linux Stack User's Guide*
- *Universal Serial Bus Specification Rev. 2.0*
- *On-The-Go Supplement to the USB 2.0 Specification Rev. 1.0a*
- *Intel PXA250 Applications Processor Integrated Development Platform* User's Guide from Accelent (linux_user_guide_EUG-0004-0001B.pdf).