勝 特 力 材 料 886-3-5753170
胜特力电子(上海) 86-21-54151736
胜特力电子(深圳) 86-755-83298787
Http://www.100y.com.tw

SGS-THOMSON MICROELECTRONICS

L2720/2/4

LOW DROP DUAL POWER OPERATIONAL AMPLIFIERS

- OUTPUT CURRENT TO 1 A
- OPERATES AT LOW VOLTAGES
- SINGLE OR SPLIT SUPPLY
- LARGE COMMON-MODE AND DIFFERENTIAL MODE RANGE
- LOW INPUT OFFSET VOLTAGE
- GROUND COMPATIBLE INPUTS
- LOW SATURATION VOLTAGE
- THERMAL SHUTDOWN
- CLAMP DIODE

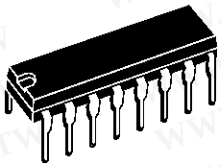

POWERDIP
(8 + 8)

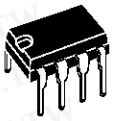

MINIDIP
(Plastic)

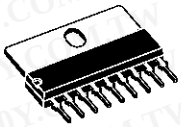

SIP9

ORDERING NUMBERS : L2720 (Powerdip)
L2722 (Minidip)
L2724 (SIP9)

DESCRIPTION

The L2720, L2722 and L2724 are monolithic integrated circuits in powerdip, minidip and SIP-9 packages, intended for use as power operational amplifiers in a wide range of applications including servo amplifiers and power supplies.

They are particularly indicated for driving, inductive loads, as motor and finds applications in compact-disc VCR automotive, etc.

The high gain and high output power capability provide superior performance whatever an operational amplifier/power booster combination is required.

PIN CONNECTIONS (top views)

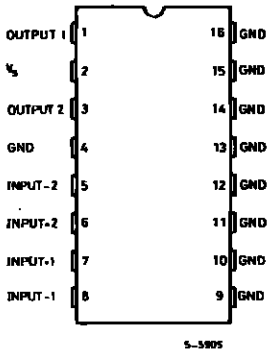

L2720

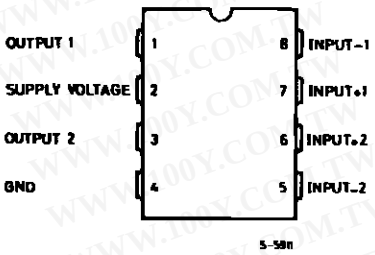

L2722

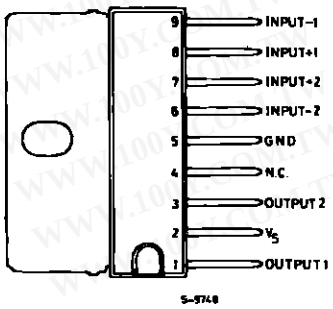

L2724

勝 特 力 材 料 886-3-5753170
胜特力电子(上海) 86-21-54151736
胜特力电子(深圳) 86-755-83298787
Http://www.100y.com.tw

BLOCK DIAGRAM

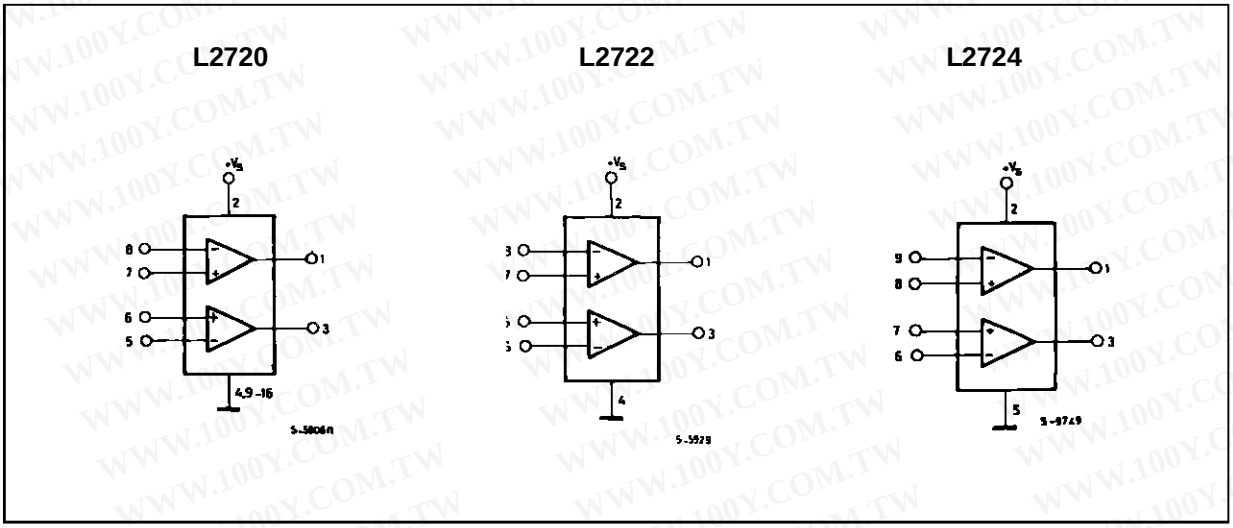

SCHEMATIC DIAGRAM (one section)

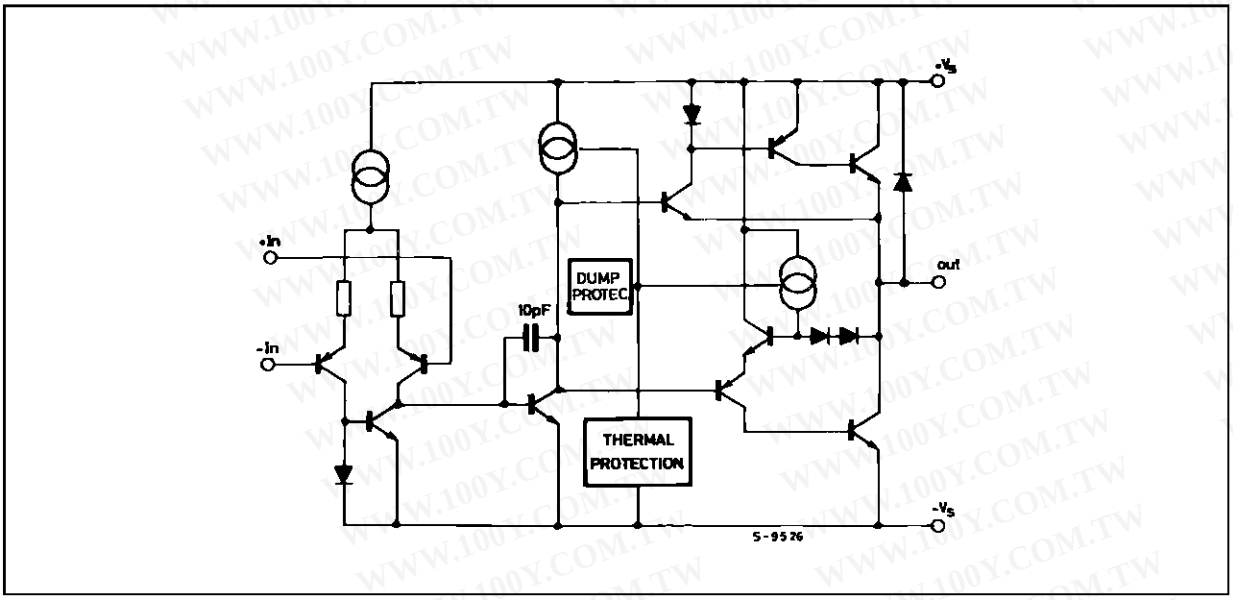

ABSOLUTE MAXIMUM RATINGS

Symbol	Parameter	Value	Unit
V_S	Supply Voltage	28	V
V_S	Peak Supply Voltage (50ms)	50	V
V_i	Input Voltage	V_s	
V_i	Differential Input Voltage	$\pm V_s$	
I_o	DC Output Current	1	A
I_p	Peak Output Current (non repetitive)	1.5	A
P_{tot}	Power Dissipation at T_{amb} = 80°C (L2720), T_{amb} = 50°C (L2722) T_{case} = 75°C (L2720) T_{case} = 50°C (L2724)	1 5 10	W
T_{stg}, T_j	Storage and Junction Temperature	–40 to 150	°C

勝 特 力 材 料 886-3-5753170
胜特力电子(上海) 86-21-54151736
胜特力电子(深圳) 86-755-83298787
Http://www.100y.com.tw

THERMAL DATA

			SIP-9	Powerdip	Minidip
$R_{th\ j\text{-}case}$	Thermal Resistance Junction-case	Max.	$10^oC/W$	$15^oC/W$	$70^oC/W$
$R_{th\ j\text{-}amb}$	Thermal Resistance Junction-ambient	Max.	$70^oC/W$	$70^oC/W$	$100^oC/W$

ELECTRICAL CHARACTERISTICS

V_S = 24V, T_{amb} = 25^oC unless otherwise specified

Symbol	Parameter	Test Conditions		Min.	Typ.	Max.	Unit
V_S	Single Supply Voltage			4		28	V
V_S	Split Supply Voltage			± 2		± 14	V
I_S	Quiescent Drain Current	$V_o = \frac{V_S}{2}$	V_S = 24V V_S = 8V		10 9	15 15	mA
I_b	Input Bias Current				0.2	1	µA
V_{os}	Input Offset Voltage					10	mV
I_{os}	Input Offset Current					100	nA
SR	Slew Rate				2		V/µs
B	Gain-bandwidth Product				1.2		MHz
R_i	Input Resistance			500			kΩ
G_v	O.L. Voltage Gain	f = 100Hz f = 1kHz		70	80 60		dB
e_N	Input Noise Voltage	B = 22Hz to 22kHz			10		µV
I_N	Input Noise Voltage				200		pA
CMR	Common Mode Rejection	f = 1kHz		66	84		dB
SVR	Supply Voltage Rejection	f = 100Hz R_G = 10kΩ V_R = 0.5V	V_S = 24V V_S = ±12V V_S = ±6V	60	70 75 80		dB
$V_{DROP(HIGH)}$		V_S = ±2.5V to ±12V	I_p = 100mA I_p = 500mA		0.7 1	 1.5	V
$V_{DROP(LOW)}$		V_S = ±2.5V to ±12V	I_p = 100mA I_p = 500mA		0.3 0.5	 1	V
C_S	Channel Separation	f = 1KHz R_L = 10Ω G_v = 30dB	V_S = 24V V_S = 6V		60 60		dB
T_{sd}	Thermal Shutdown Junction Temperature				145		^oC

Figure 1 : Quiescent Current vs. Supply Voltage

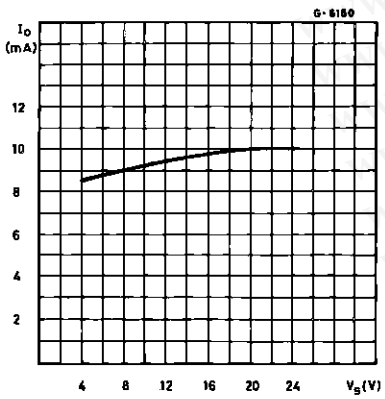

FIgure 2 : Open Loop Gain vs. Frequency

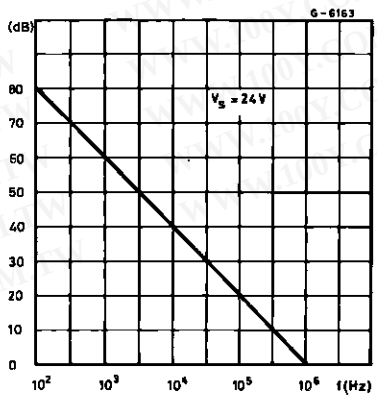

Figure 3 : Common Mode Rejection vs. Frequency

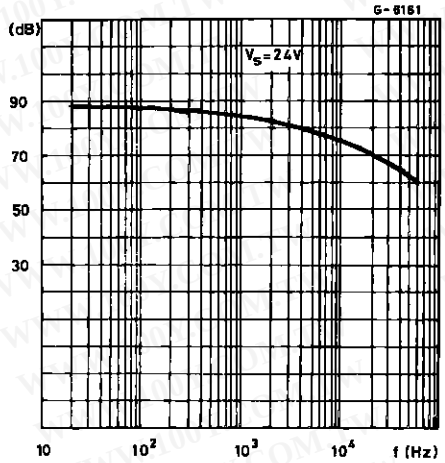

Figure 4 : Output Swing vs. Load Current (V_S = ± 5 V.

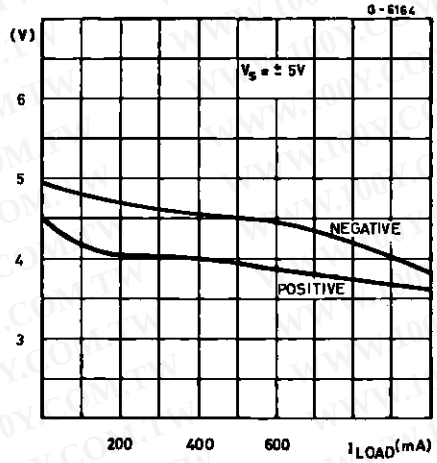

Figure 5 : Output Swing vs. Load Current (V_S = ± 12 V.

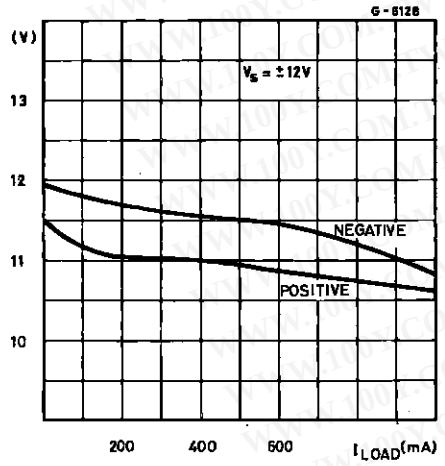

Figure 6 : Supply Voltage rejection vs. Frequency

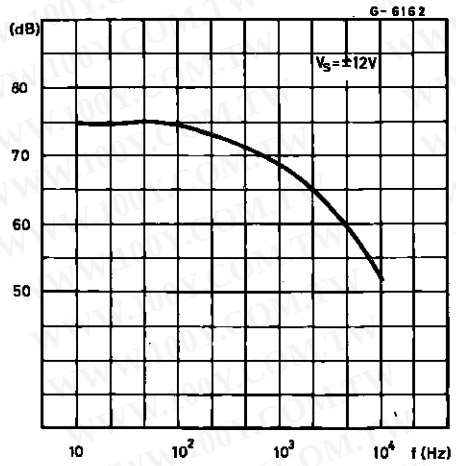

Figure 7 : Channel Separation vs. Frequency

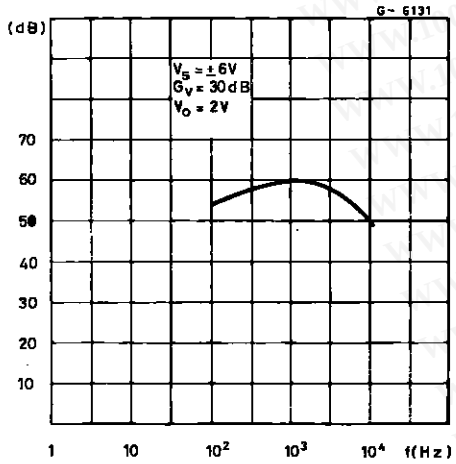

勝 特 力 材 料 886-3-5753170
胜特力电子(上海) 86-21-54151736
胜特力电子(深圳) 86-755-83298787
Http://www.100y.com.tw

勝 特 力 材 料 886-3-5753170
胜特力电子(上海) 86-21-54151736
胜特力电子(深圳) 86-755-83298787
Http://www.100y.com.tw

APPLICATION SUGGESTION

In order to avoid possible instability occuring into final stage the usual suggestions for the linear power stages are useful, as for instance :

- layout accuracy ;
- A 100nF capacitor connected between supply pins and ground ;
- boucherot cell (0.1 to 0.2 µF + 1Ω series) between outputs and ground or across the load. With single supply operation, a resistor (1kΩ) between the output and supply pin can be necessary for stability.

Figure 8 : Bidirectional DC Motor Control with µP Compatible Inputs

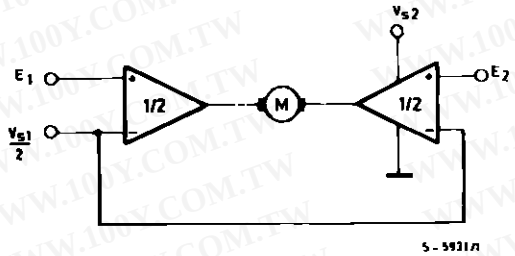

V_{S1} = logic supply voltage

Must be $V_{S2} > V_{S1}$

E1, E2 = logic inputs

Figure 9 : Servocontrol for Compact-disc

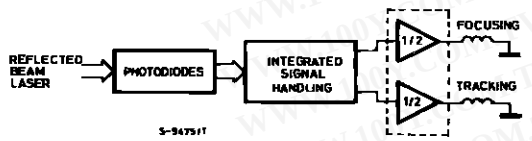

Figure 10 : Capstan Motor Control in Video Recorders

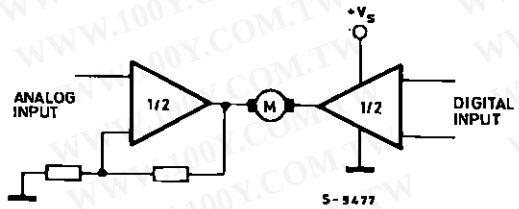

Figure 11 : Motor Current Control Circuit

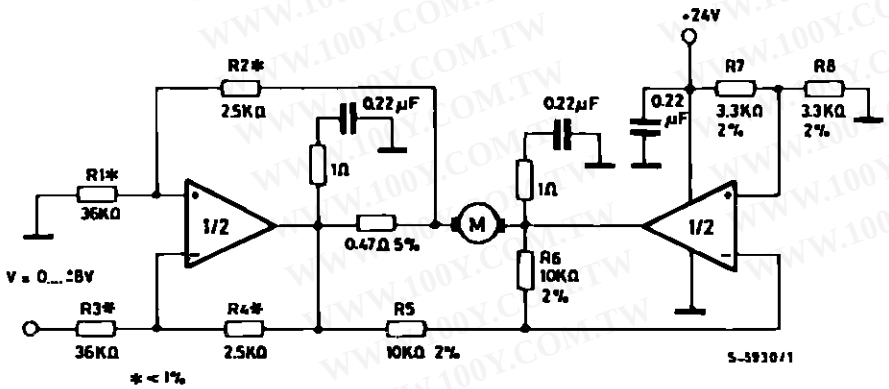

Note : The input voltage level is compatible with L291 (8 - BIT D/A converter)

勝 特 力 材 料 886-3-5753170
胜特力电子(上海) 86-21-54151736
胜特力电子(深圳) 86-755-83298787
Http://www.100y.com.tw

Figure 12 : Bidirectional Speed Control of DC Motors

For circuit stability ensure that $R_X > \frac{2R3 \cdot R1}{RM}$ where R_M = internal resistance of motor.

The voltage available at the terminals of the motor is $V_M = 2\,(V_I - \frac{V_S}{2}) + |R_O|.\ I_M$ where $|R_O| = \frac{2R3 \cdot R1}{R_X}$ and I_M is the motor current.

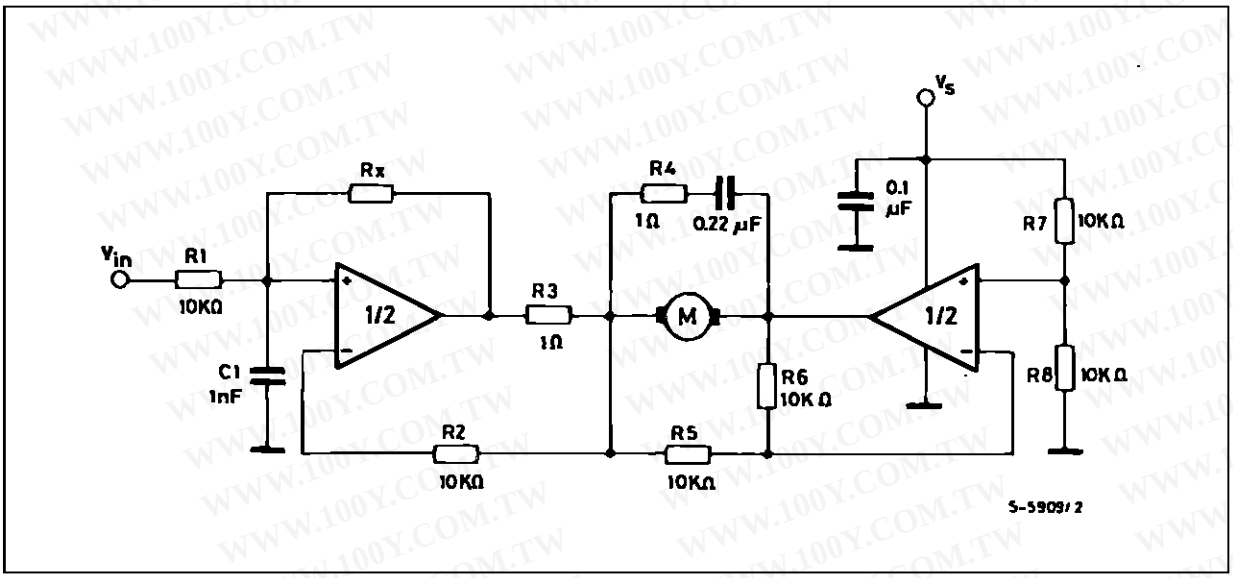

Figure 13 : VHS-VCR Motor Control Circuit

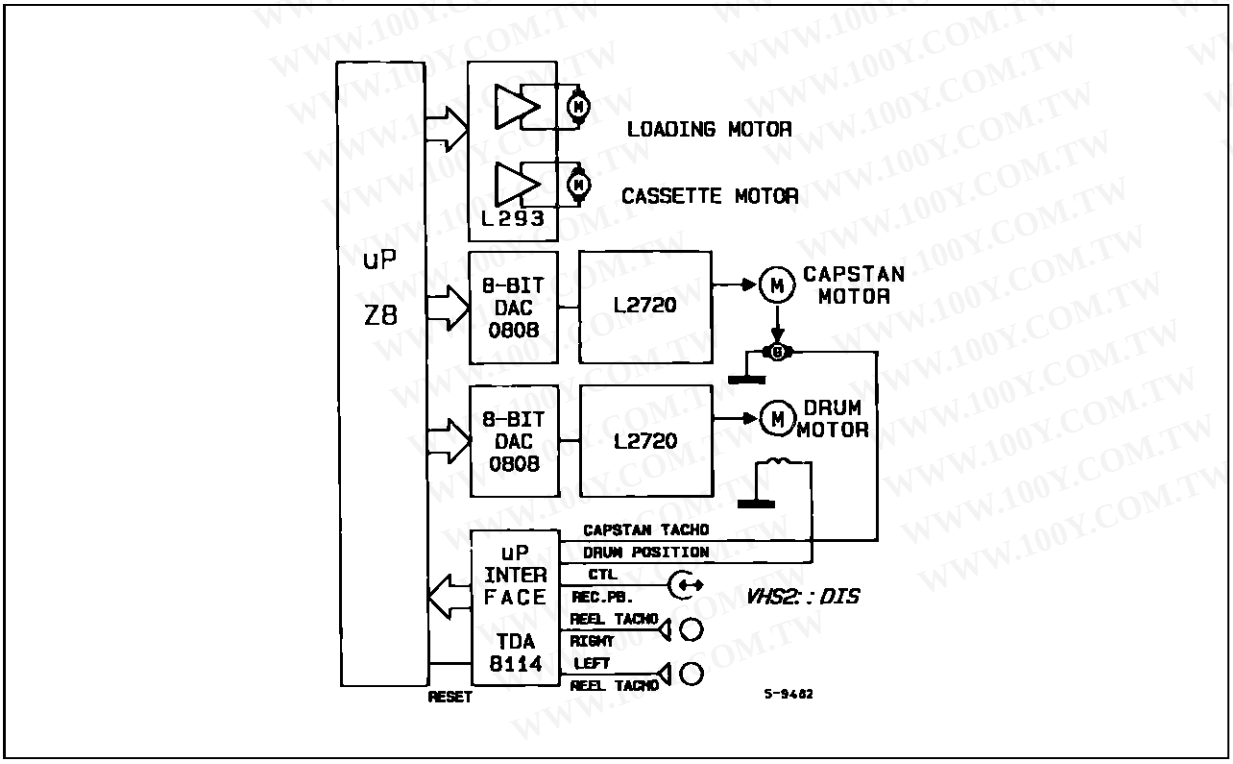

勝 特 力 材 料 886-3-5753170
胜特力电子(上海) 86-21-54151736
胜特力电子(深圳) 86-755-83298787
Http://www.100y.com.tw

POWERDIP 16 PACKAGE MECHANICAL DATA

DIM.	mm			inch		
	MIN.	TYP.	MAX.	MIN.	TYP.	MAX.
a1	0.51			0.020		
B	0.85		1.40	0.033		0.055
b		0.50			0.020	
b1	0.38		0.50	0.015		0.020
D			20.0			0.787
E		8.80			0.346	
e		2.54			0.100	
e3		17.78			0.700	
F			7.10			0.280
I			5.10			0.201
L		3.30			0.130	
Z			1.27			0.050

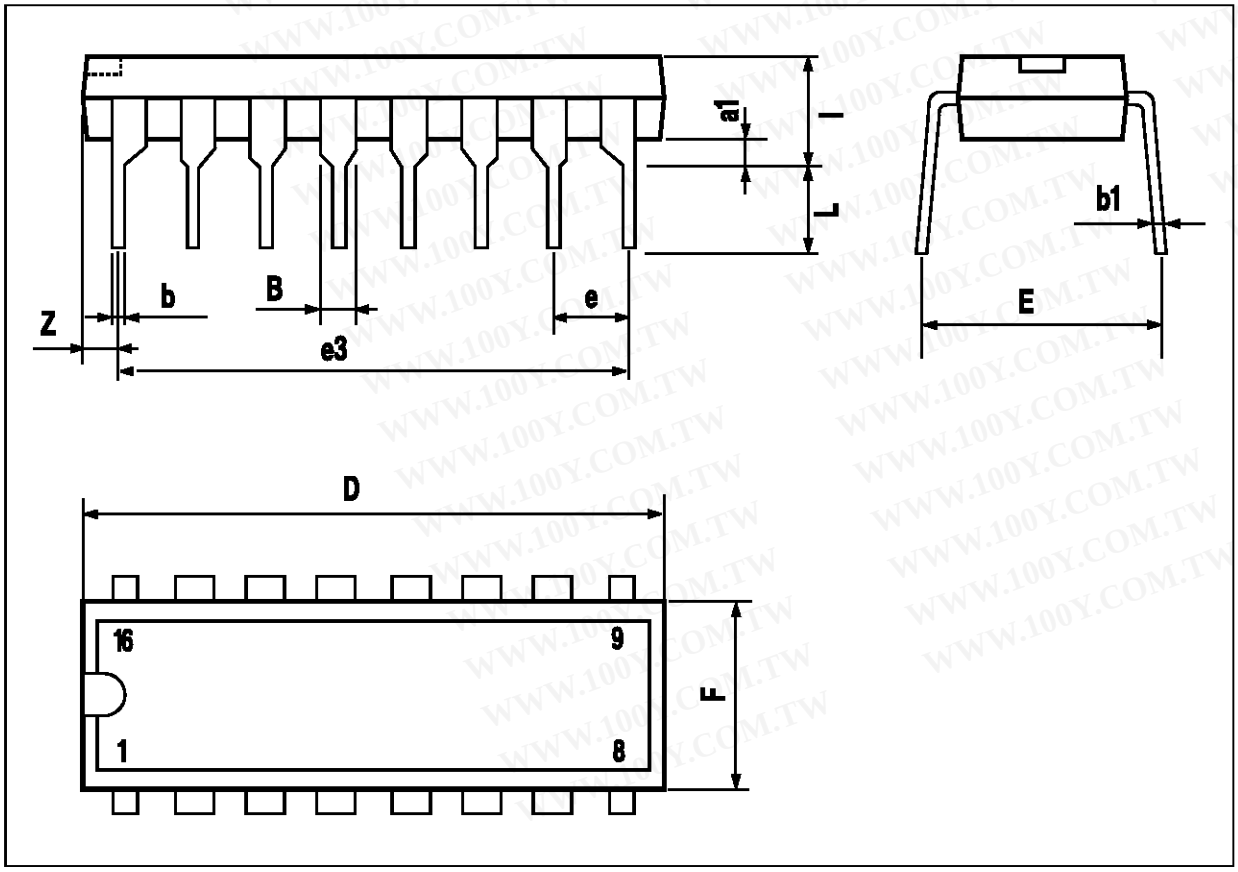

勝 特 力 材 料 886-3-5753170
胜特力电子(上海) 86-21-54151736
胜特力电子(深圳) 86-755-83298787
Http://www.100y.com.tw

MINIDIP PACKAGE MECHANICAL DATA

DIM.	mm			inch		
	MIN.	TYP.	MAX.	MIN.	TYP.	MAX.
A		3.3			0.130	
a1	0.7			0.028		
B	1.39		1.65	0.055		0.065
B1	0.91		1.04	0.036		0.041
b		0.5			0.020	
b1	0.38		0.5	0.015		0.020
D			9.8			0.386
E		8.8			0.346	
e		2.54			0.100	
e3		7.62			0.300	
e4		7.62			0.300	
F			7.1			0.280
I			4.8			0.189
L		3.3			0.130	
Z	0.44		1.6	0.017		0.063

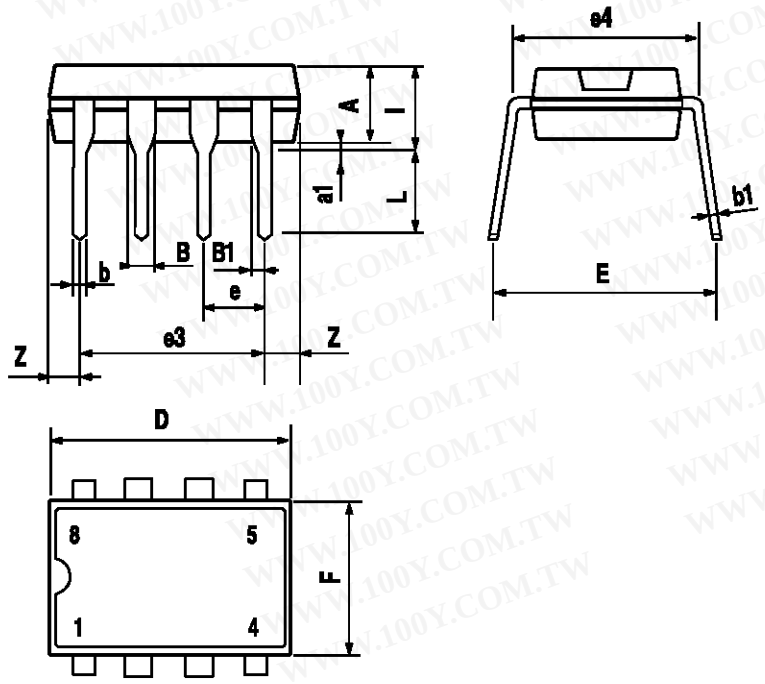

勝 特 力 材 料 886-3-5753170
胜特力电子(上海) 86-21-54151736
胜特力电子(深圳) 86-755-83298787
Http://www.100y.com.tw

SIP9 PACKAGE MECHANICAL DATA

DIM.	mm			inch		
	MIN.	TYP.	MAX.	MIN.	TYP.	MAX.
A			7.1			0.280
a1	2.7		3	0.106		0.118
B			23			0.90
B3			24.8			0.976
b1		0.5			0.020	
b3	0.85		1.6	0.033		0.063
C		3.3			0.130	
c1		0.43			0.017	
c2		1.32			0.052	
D			21.2			0.835
d1		14.5			0.571	
e		2.54			0.100	
e3		20.32			0.800	
L	3.1			0.122		
L1		3			0.118	
L2		17.6			0.693	
L3			0.25			0.010
L4	17.4		17.85	0.685		0,702
M		3.2			0.126	
N		1			0.039	
P			0.15			0.006

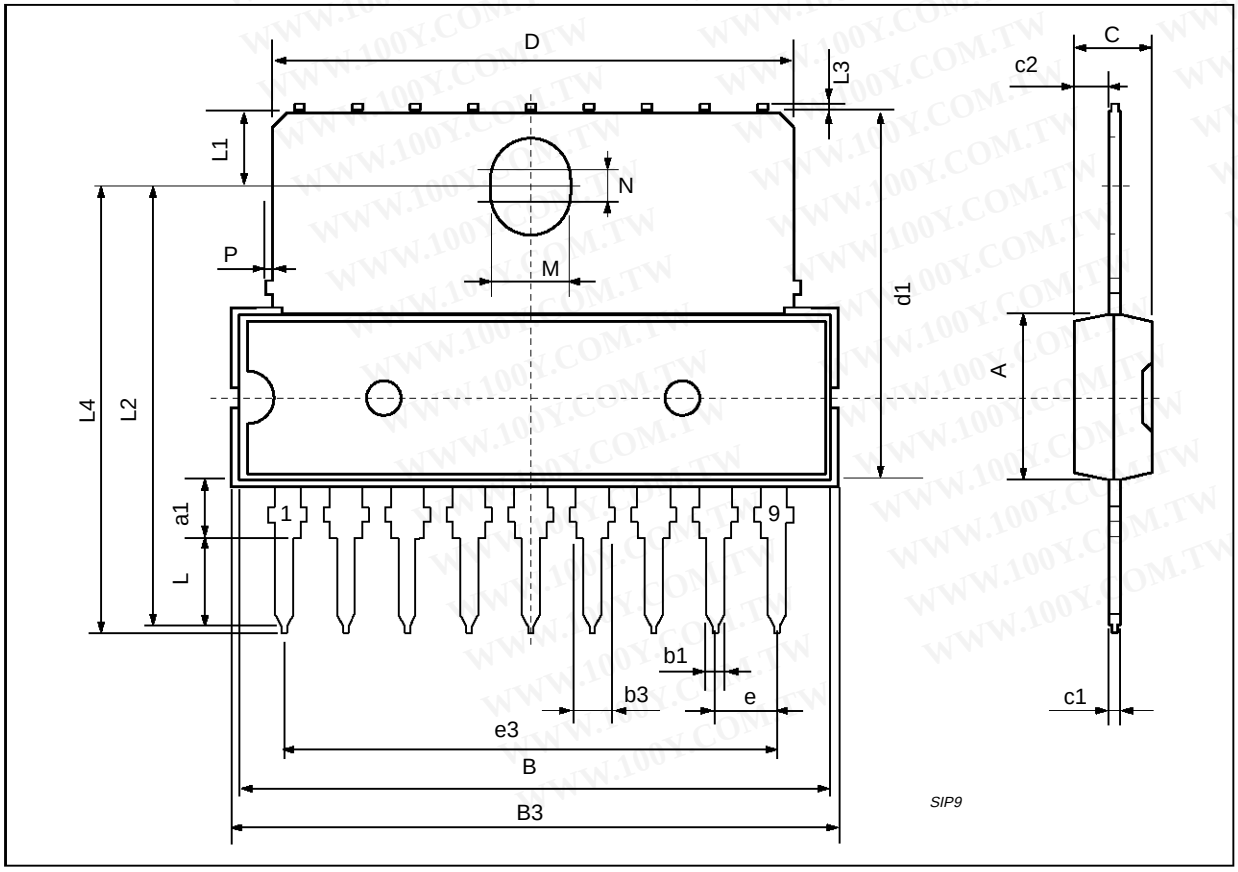

勝 特 力 材 料 886-3-5753170
胜特力电子(上海) 86-21-54151736
胜特力电子(深圳) 86-755-83298787
Http://www.100y.com.tw

Information furnished is believed to be accurate and reliable. However, SGS-THOMSON Microelectronics assumes no responsibility for the consequences of use of such information nor for any infringement of patents or other rights of third parties which may result from its use. No license is granted by implication or otherwise under any patent or patent rights of SGS-THOMSON Microelectronics. Specification mentioned in this publication are subject to change without notice. This publication supersedes and replaces all information previously supplied. SGS-THOMSON Microelectronics products are not authorized for use as critical components in life support devices or systems without express written approval of SGS-THOMSON Microelectronics.

© 1996 SGS-THOMSON Microelectronics – Printed in Italy – All Rights Reserved
SGS-THOMSON Microelectronics GROUP OF COMPANIES
Australia - Brazil - Canada - China - France - Germany - Hong Kong - Italy - Japan - Korea - Malaysia - Malta - Morocco - The Netherlands - Singapore - Spain - Sweden - Switzerland - Taiwan - Thailand - United Kingdom - U.S.A.