SHAPE AND SIZE : TC-241M-0.5A-3726

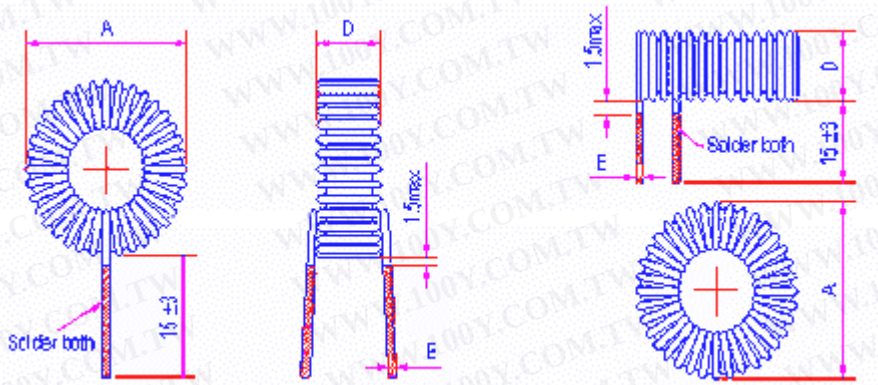

Features :

- Useful in a wide variety of power conversion and line filter applications .
- Wound on Iron Powder material toroids .
- COST-EFFECTIVE design .
- Low volume hand wound to high volume automatic machine wound .
- 130¢J UEW-NY wire .
- High saturation current .
- Coated with varnish .

勝 特 力 材 料 886-3-5753170
胜特力电子(上海) 86-21-54151736
胜特力电子(深圳) 86-755-83298787
Http://www.100y.com.tw

Ordering information :

(1)Type : Toroidal coils .

(2)Inductance : Example : 101 for 100 uH

(3)Inductance tolerance : J :±5% ; K :±10% ; M:±20% .

(4)Rated current in Amps .

(5)Core style : OD =0.5" .

(6)Core material : " -26 " or " -92 " .

Characteristics :

(1) Inductance range : 1.0uH to 10000uH .
(2) (2)Current rating: Based on current density about 8.0 A / mm^2 .
(3) Rated frequency : "-26" : 50Hz ~ 100 KHz ; "-52" :10KHz~ 500KHz .
(4) (4)Operating temperature : -55°C to 125°C .

- Test equipent :

  L tested by LCR meter @ 1KHz .

  DCR tested by Milliohm meter .

- **Applications :**

- Power supplies .
- Swithing Circuits .
- SCR and Triac Controls .
- Output chokes .
- EMI / RFI chokes .
- Other filters .