TL497A
SWITCHING VOLTAGE REGULATORS

SLVS009D – JUNE 1976 – REVISED JULY 1999

- **High Efficiency . . . 60% or Greater**
- **Output Current . . . 500 mA**
- **Input Current Limit Protection**
- **TTL-Compatible Inhibit**
- **Adjustable Output Voltage**
- **Input Regulation . . . 0.2% Typ**
- **Output Regulation . . . 0.4% Typ**
- **Soft Start-Up Capability**

D, N, OR PW PACKAGE
(TOP VIEW)

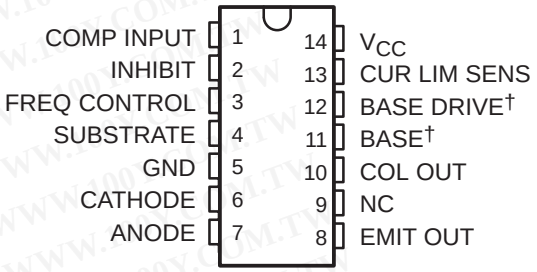

NC – No internal connection
† BASE (11) and BASE DRIVE (12) are used for device testing only. They normally are not used in circuit applications of the device.

description

The TL497A incorporates all the active functions required in the construction of switching voltage regulators. It can also be used as the control element to drive external components for high-power-output applications. The TL497A was designed for ease of use in step-up, step-down, or voltage-inversion applications requiring high efficiency.

The TL497A is a fixed-on-time variable-frequency switching-voltage-regulator control circuit. The switch-on time is programmed by a single external capacitor connected between FREQ CONTROL and GND. This capacitor, C_T, is charged by an internal constant-current generator to a predetermined threshold. The charging current and the threshold vary proportionally with V_{CC}. Thus, the switch-on time remains constant over the specified range of input voltage (4.5 V to 12 V). Typical on times for various values of C_T are as follows:

TIMING CAPACITOR, C_T (pF)	200	250	350	400	500	750	1000	1500	2000
ON TIME (µs)	19	22	26	32	44	56	80	120	180

The output voltage is controlled by an external resistor ladder network (R1 and R2 in Figures 1, 2, and 3) that provides a feedback voltage to the comparator input. This feedback voltage is compared to the reference voltage of 1.2 V (relative to SUBSTRATE) by the high-gain comparator. When the output voltage decays below the value required to maintain 1.2 V at the comparator input, the comparator enables the oscillator circuit, which charges and discharges C_T as described above. The internal pass transistor is driven on during the charging of C_T. The internal transistor can be used directly for switching currents up to 500 mA. Its collector and emitter are uncommitted, and it is current driven to allow operation from the positive supply voltage or ground. An internal Schottky diode matched to the current characteristics of the internal transistor also is available for blocking or commutating purposes. The TL497A also has on-chip current-limit circuitry that senses the peak currents in the switching regulator and protects the inductor against saturation and the pass transistor against overstress. The current limit is adjustable and is programmed by a single sense resistor, R_{CL}, connected between V_{CC} and CUR LIM SENS. The current-limit circuitry is activated when 0.7 V is developed across R_{CL}. External gating is provided by the INHIBIT input. When the INHIBIT input is high, the output is turned off.

Simplicity of design is a primary feature of the TL497A. With only six external components (three resistors, two capacitors, and one inductor), the TL497A operates in numerous voltage-conversion applications (step-up, step-down, invert) with as much as 85% of the source power delivered to the load. The TL497A replaces the TL497 in all applications.

The TL497AC is characterized for operation from 0°C to 70°C. The TL497AI is characterized for operation from –40°C to 85°C.

AVAILABLE OPTIONS

T_A	PACKAGED DEVICES			CHIP FORM (Y)
	SMALL-OUTLINE (D)	PLASTIC DIP (N)	SHRINK SMALL-OUTLINE (PW)	
0°C to 70°C	TL497ACD	TL497ACN	TL497ACPW	TL497AY
–40°C to 85°C	TL497AID	TL497AIN	—	—

The D and PW packages are only taped and reeled. Add the suffix R to the device type (e.g., TL497ACPWR). Chip forms are tested at 25°C.

functional block diagram

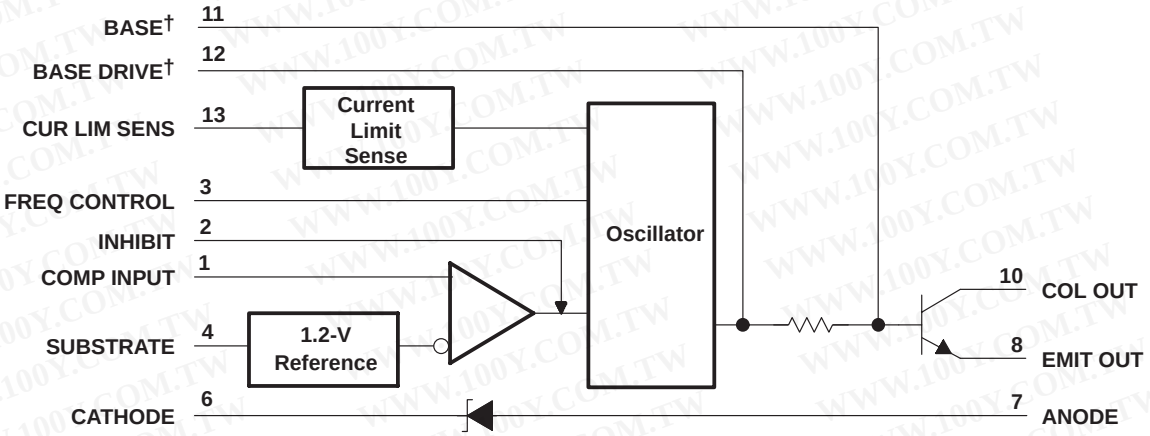

† BASE and BASE DRIVE are used for device testing only. They normally are not used in circuit applications of the device.

absolute maximum ratings over operating free-air temperature range (unless otherwise noted)†

Supply voltage, V_{CC} (see Note 1) . . . . . 15 V
Output voltage, V_O . . . . . 35 V
Input voltage, V_I(COMP INPUT) . . . . . 5 V
Input voltage, V_I(INHIBIT) . . . . . 5 V
Diode reverse voltage . . . . . 35 V
Power switch current . . . . . 750 mA
Diode forward current . . . . . 750 mA
Package thermal impedance, θ_{JA} (see Notes 2 and 3): D package . . . . . 86°C/W
N package . . . . . 101°C/W
PW package . . . . . 113°C/W
Lead temperature 1,6 mm (1/16 inch) from case for 60 seconds . . . . . 260°C
Storage temperature range, T_{stg} . . . . . –65°C to 150°C

†Stresses beyond those listed under "absolute maximum ratings" may cause permanent damage to the device. These are stress ratings only, and functional operation of the device at these or any other conditions beyond those indicated under "recommended operating conditions" is not implied. Exposure to absolute-maximum-rated conditions for extended periods may affect device reliability.

NOTES:
1. All voltage values except diode voltages are with respect to network ground terminal.
2. Maximum power dissipation is a function of T_J(max), θ_{JA}, and T_A. The maximum allowable power dissipation at any allowable ambient temperature is $P_D = (T_J(max) - T_A)/\theta_{JA}$. Operating at the absolute maximum T_J of 150°C can impact reliability.
3. The package thermal impedance is calculated in accordance with JESD 51, except for through-hole packages, which use a trace length of zero.

recommended operating conditions

			MIN	MAX	UNIT
Supply voltage, V_{CC}			4.5	12	V
High-level input voltage, V_{IH}	INHIBIT pin		2.5		V
Low-level input voltage, V_{IL}	INHIBIT pin			0.8	V
Output voltage	Step-up configuration (see Figure 1)		$V_I + 2$	30	V
	Step-down configuration (see Figure 2)		V_{ref}	$V_I - 1$	
	Inverting regulator (see Figure 3)		$-V_{ref}$	–25	
Power switch current				500	mA
Diode forward current				500	mA
Operating free-air temperature range, T_A		TL497AC	0	70	°C
		TL497AI	–40	85	

electrical characteristics over recommended operating conditions, V_{CC} = 6 V (unless otherwise noted)

PARAMETER	TEST CONDITIONS		T_A†	TL497AC			TL497AI			UNIT
				MIN	TYP‡	MAX	MIN	TYP‡	MAX	
High-level input current, INHIBIT	$V_{I(I)}$ = 5 V		Full range		0.8	1.5		0.8	1.5	mA
Low-level input current, INHIBIT	$V_{I(I)}$ = 0 V		Full range		5	10		5	20	µA
Comparator reference voltage	V_I = 4.5 V to 6 V		Full range	1.08	1.2	1.32	1.14	1.2	1.26	V
Comparator input bias current	V_I = 6 V		Full range		40	100		40	100	µA
Switch on-state voltage	V_I = 4.5 V	I_O = 100 mA	25°C		0.13	0.2		0.13	0.2	V
		I_O = 500 mA	Full range			0.85			1	
Switch off-state current	V_I = 4.5 V, V_O = 30 V		25°C		10	50		10	50	µA
			Full range			200			500	
Sense voltage, CUR LIM SENS	V_I = 6 V		25°C	0.45		1	0.45		1	V
Diode forward voltage	I_O = 10 mA		Full range		0.75	0.85		0.75	0.95	V
	I_O = 100 mA		Full range		0.9	1		0.9	1.1	
	I_O = 500 mA		Full range		1.33	1.55		1.33	1.75	
Diode reverse voltage	I_O = 500 µA		Full range				30			V
	I_O = 200 µA		Full range	30						
On-state supply current			25°C		11	14		11	14	mA
			Full range			15			16	
Off-state supply current			25°C		6	9		6	9	mA
			Full range			10			11	

† Full range is 0°C to 70°C for the TL497AC and –40°C to 85°C for the TL497AI.
‡ All typical values are at T_A = 25°C.

electrical characteristics over recommended operating conditions, V_{CC} = 6 V, T_A = 25°C (unless otherwise noted)

PARAMETER	TEST CONDITIONS		TL497AY			UNIT
			MIN	TYP	MAX	
High-level input current, INHIBIT	$V_{I(I)}$ = 5 V			0.8		mA
Low-level input current, INHIBIT	$V_{I(I)}$ = 0 V			5		µA
Comparator reference voltage	V_I = 4.5 V to 6 V			1.2		V
Comparator input bias current	V_I = 6 V			40		µA
Switch on-state voltage	V_I = 4.5 V,	I_O = 100 mA		0.13		V
Switch off-state current	V_I = 4.5 V,	V_O = 30 V		10		µA
Diode forward voltage	I_O = 10 mA			0.75		V
	I_O = 100 mA			0.9		
	I_O = 500 mA			1.33		
On-state supply current				11		mA
Off-state supply current				6		mA

APPLICATION INFORMATION

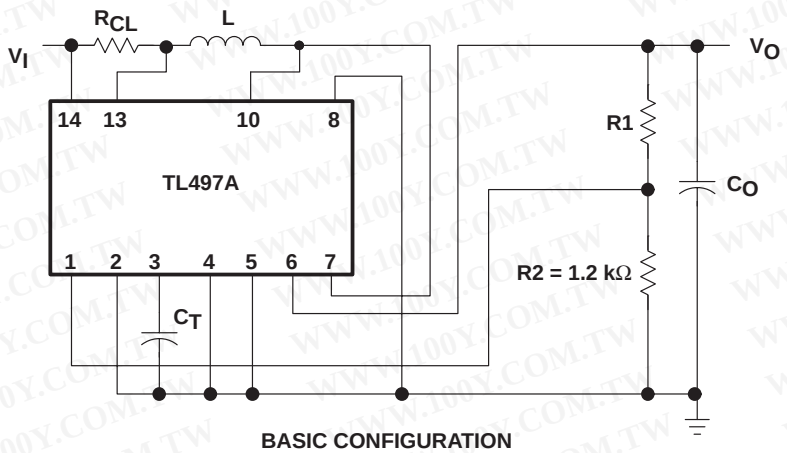

BASIC CONFIGURATION
(Peak Switching Current = $I_{(PK)}$ < 500 mA)

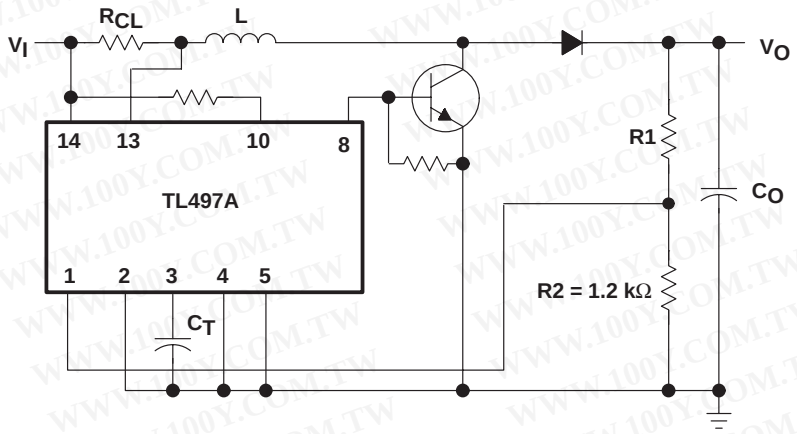

EXTENDED POWER CONFIGURATION
(using external transistor)

DESIGN EQUATIONS

- $I_{(PK)} = 2\ I_O\,max \left[\frac{V_O}{V_I}\right]$
- $L\ (\mu H) = \frac{V_I}{I_{(PK)}} t_{on}\ (\mu s)$

Choose L (50 to 500 μH), calculate t_{on} (25 to 150 μs)

- $C_T(pF) \approx 12\ t_{on}\ (\mu s)$
- $R1 = (V_O - 1.2\ V)\ k\Omega$
- $R_{CL} = \frac{0.5\ V}{I_{(PK)}}$
- $C_O\ (\mu F) \approx t_{on}(\mu s) \frac{\left[\frac{V_I}{V_O} I_{(PK)} + I_O\right]}{V_{ripple}\ (PK)}$

Figure 1. Positive Regulator, Step-Up Configurations

APPLICATION INFORMATION

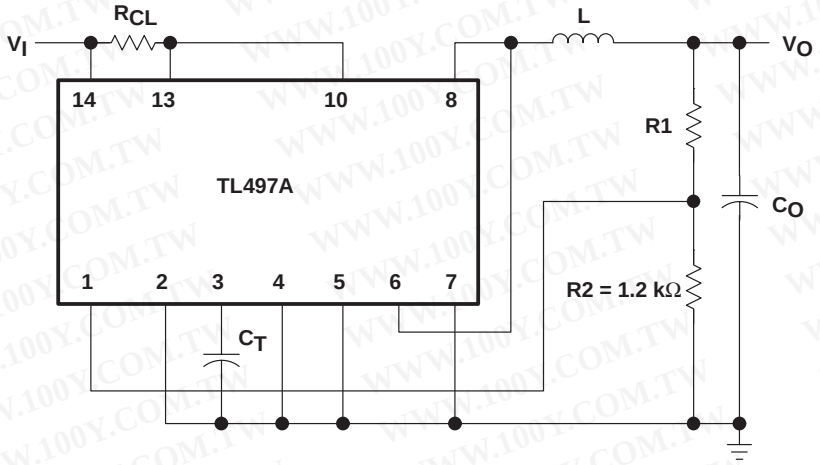

BASIC CONFIGURATION
(Peak Switching Current = $I_{(PK)}$ < 500 mA)

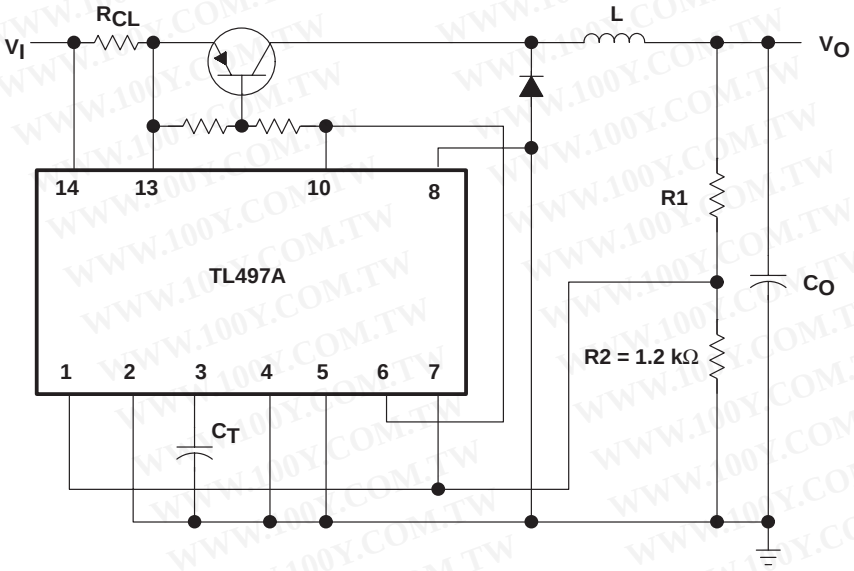

EXTENDED POWER CONFIGURATION
(using external transistor)

DESIGN EQUATIONS

- $I_{(PK)} = 2\ I_O\ max$
- $L\ (\mu H) = \dfrac{V_I - V_O}{I_{(PK)}}\ t_{on}(\mu s)$

Choose L (50 to 500 µH), calculate t_{on} (10 to 150 µs)

- $C_T(pF) \approx 12\ t_{on}(\mu s)$
- $R1 = (V_O - 1.2\ V)\ k\Omega$
- $R_{CL} = \dfrac{0.5\ V}{I_{(PK)}}$
- $C_O\ (\mu F) \approx t_{on}(\mu s) \dfrac{\left[\dfrac{V_I - V_O}{V_O}\ I_{(PK)} + I_O\right]}{V_{ripple}\ (PK)}$

Figure 2. Positive Regulator, Step-Down Configurations

APPLICATION INFORMATION

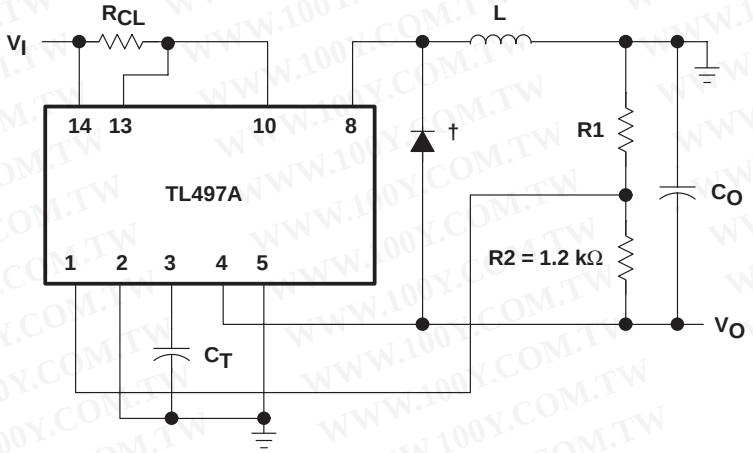

BASIC CONFIGURATION
(Peak Switching Current = $I_{(PK)}$ < 500 mA)

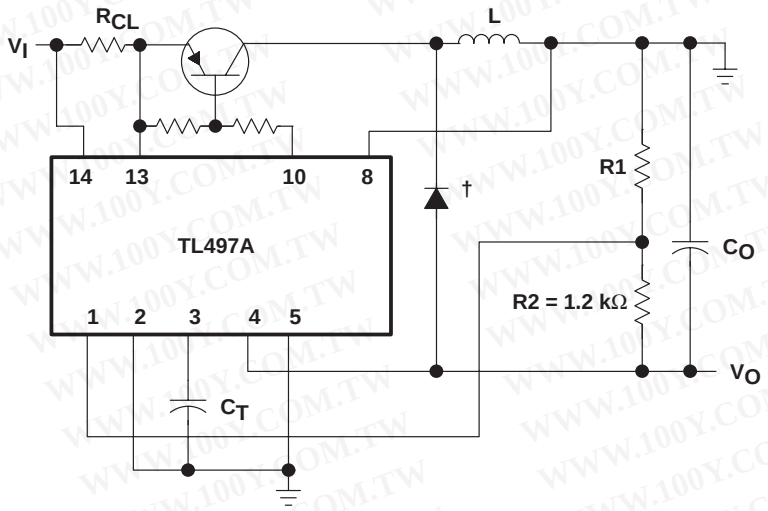

EXTENDED POWER CONFIGURATION
(using external transistor)

† Use external catch diode, e.g., 1N4001, when building an inverting supply with the TL497A.

DESIGN EQUATIONS

- $I_{(PK)} = 2\ I_O \max\left[1 + \frac{|V_O|}{V_I}\right]$
- $L\ (\mu H) = \frac{V_I}{I_{(PK)}} t_{on}(\mu s)$

Choose L (50 to 500 μH), calculate t_{on} (10 to 150 μs)

- $C_T(pF) \approx 12\ t_{on}(\mu s)$
- $R1 = \left(|V_O| - 1.2\ V\right)\ k\Omega$

  $R_{CL} = \frac{0.5\ V}{I_{(PK)}}$
- $C_O\ (\mu F) \approx t_{on}(\mu s) \frac{\left[\frac{V_I}{|V_O|} I_{(PK)} + I_O\right]}{V_{ripple}\ (PK)}$

Figure 3. Inverting Applications

APPLICATION INFORMATION

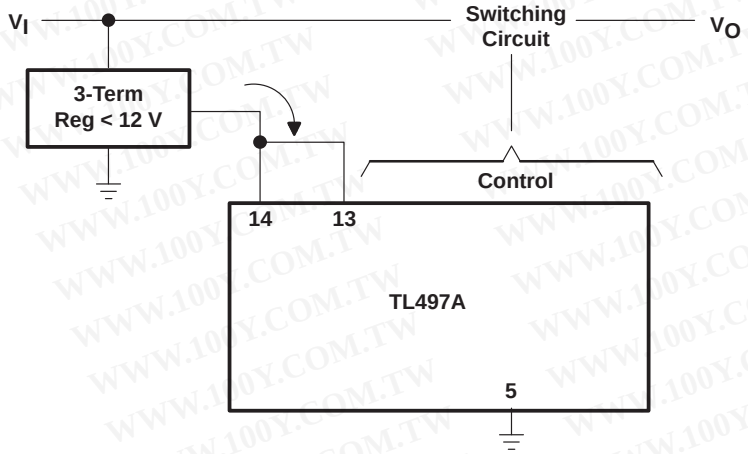

EXTENDED INPUT CONFIGURATION WITHOUT CURRENT LIMIT

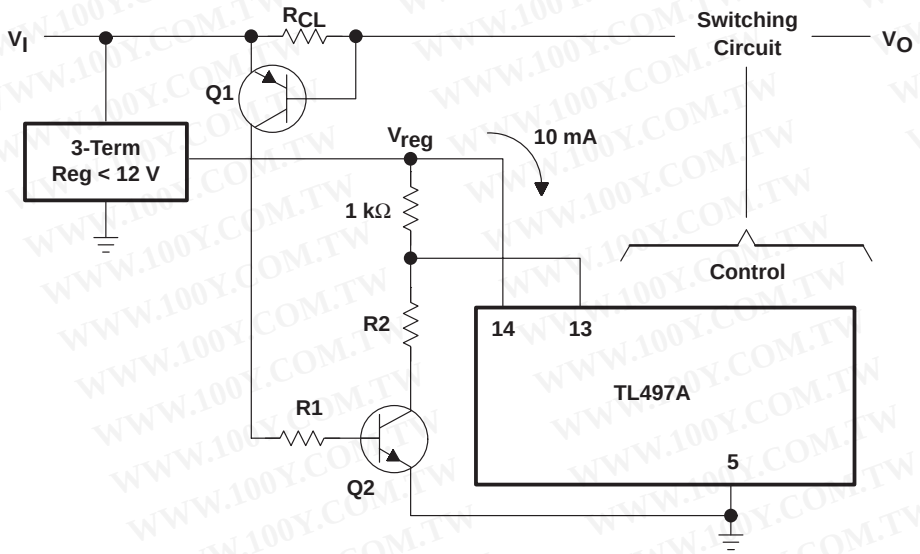

DESIGN EQUATIONS

- $R_{CL} = \frac{V_{BE(Q1)}}{I_{limit\ (PK)}}$
- $R1 + \frac{V_I}{I_{B(Q2)}}$
- $R2 = \left(V_{reg} - 1\right) 10\ k\Omega$

CURRENT LIMIT FOR EXTENDED INPUT CONFIGURATION

Figure 4. Extended Input Voltage Range (V_I > 12 V)

IMPORTANT NOTICE

Texas Instruments and its subsidiaries (TI) reserve the right to make changes to their products or to discontinue any product or service without notice, and advise customers to obtain the latest version of relevant information to verify, before placing orders, that information being relied on is current and complete. All products are sold subject to the terms and conditions of sale supplied at the time of order acknowledgement, including those pertaining to warranty, patent infringement, and limitation of liability.

TI warrants performance of its semiconductor products to the specifications applicable at the time of sale in accordance with TI's standard warranty. Testing and other quality control techniques are utilized to the extent TI deems necessary to support this warranty. Specific testing of all parameters of each device is not necessarily performed, except those mandated by government requirements.

CERTAIN APPLICATIONS USING SEMICONDUCTOR PRODUCTS MAY INVOLVE POTENTIAL RISKS OF DEATH, PERSONAL INJURY, OR SEVERE PROPERTY OR ENVIRONMENTAL DAMAGE ("CRITICAL APPLICATIONS"). TI SEMICONDUCTOR PRODUCTS ARE NOT DESIGNED, AUTHORIZED, OR WARRANTED TO BE SUITABLE FOR USE IN LIFE-SUPPORT DEVICES OR SYSTEMS OR OTHER CRITICAL APPLICATIONS. INCLUSION OF TI PRODUCTS IN SUCH APPLICATIONS IS UNDERSTOOD TO BE FULLY AT THE CUSTOMER'S RISK.

In order to minimize risks associated with the customer's applications, adequate design and operating safeguards must be provided by the customer to minimize inherent or procedural hazards.

TI assumes no liability for applications assistance or customer product design. TI does not warrant or represent that any license, either express or implied, is granted under any patent right, copyright, mask work right, or other intellectual property right of TI covering or relating to any combination, machine, or process in which such semiconductor products or services might be or are used. TI's publication of information regarding any third party's products or services does not constitute TI's approval, warranty or endorsement thereof.