勝 特 力 材 料 886-3-5753170
胜特力电子(上海) 86-21-54151736
胜特力电子(深圳) 86-755-83298787
Http://www.100y.com.tw

Winbond Electronics Corp.

32K × 8 CMOS STATIC RAM

GENERAL DESCRIPTION

The W24257 is a slow speed, low power CMOS static RAM organized as 32768 × 8 bits that operates on a single 5-volt power supply. This device is manufactured using Winbond's high performance CMOS technology.

FEATURES

- Low power consumption:
  - Active: 325 mW (max.)
  - Standby: 75 µW (max.) (LL-version)
    150 µW (max.) (L-version)
- Access time: 70 nS (max.)
- Single +5V power supply
- Fully static operation
- All inputs and outputs directly TTL compatible
- Three-state outputs
- Battery back-up operation capability
- Data retention voltage: 2V (min.)
- Packaged in 28-pin 330 mil SOP, standard type one TSOP (8 mm x 13.4 mm)

PIN CONFIGURATIONS

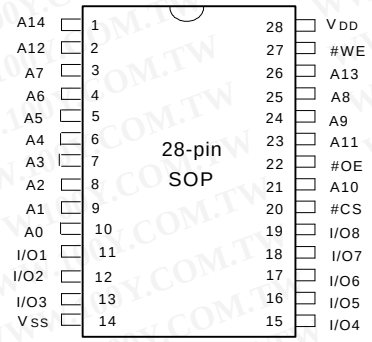

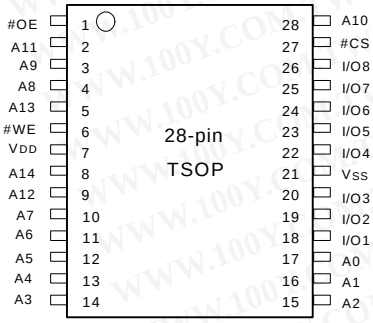

BLOCK DIAGRAM

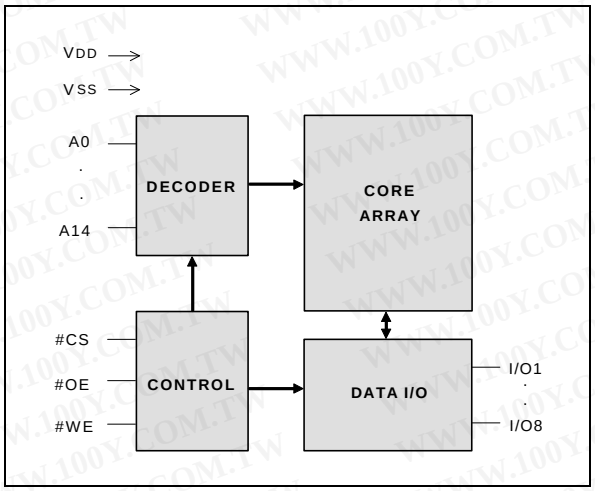

PIN DESCRIPTION

SYMBOL	DESCRIPTION
A0–A14	Address Inputs
I/O1–I/O8	Data Inputs/Outputs
#CS	Chip Select Input
#WE	Write Enable Input
#OE	Output Enable Input
VDD	Power Supply
VSS	Ground

Publication Release Date: February 2001
Revision A16

勝 特 力 材 料 886-3-5753170
胜特力电子(上海) 86-21-54151736
胜特力电子(深圳) 86-755-83298787
Http://www.100y.com.tw

TRUTH TABLE

#CS	#OE	#WE	MODE	I/O1 - I/O8	VDD CURRENT
H	X	X	Not Selected	High Z	ISB, ISB1
L	H	H	Output Disable	High Z	IDD
L	L	H	Read	Data Out	IDD
L	X	L	Write	Data In	IDD

DC CHARACTERISTICS

Absolute Maximum Ratings

PARAMETER	RATING	UNIT
Supply Voltage to VSS Potential	-0.5 to +7.0	V
Input/Output to VSS Potential	-0.5 to VDD +0.5	V
Allowable Power Dissipation	1.0	W
Storage Temperature	-65 to +150	°C
Operating Temperature	0 to +70	°C

Note: Exposure to conditions beyond those listed under Absolute Maximum Ratings may adversely affect the life and reliability of the device.

Operating Characteristics

(VDD = 5V ±10%, VSS = 0V, TA = 0 to 70° C for LL/L; -20 to 85° C for LE)

PARAMETER	SYM.	TEST CONDITIONS		MIN.	TYP.	MAX.	UNIT
Input Low Voltage	VIL	-		-0.5	-	+0.8	V
Input High Voltage	VIH	-		+2.2	-	VDD +0.5	V
Input Leakage Current	ILI	VIN = VSS to VDD		-2	-	+2	µA
Output Leakage Current	ILO	VI/O = VSS to VDD, #CS = VIH (min.) or #OE = VIH (min.) or #WE = VIL (max.)		-2	-	+ 2	µA
Output Low Voltage	VOL	IOL = +4.0 mA		-	-	0.4	V
Output High Voltage	VOH	IOH = -1.0 mA		2.4	-	-	V
Operating Power Supply Current	IDD	#CS = VIL (min.), I/O = 0 mA Cycle = min., Duty = 100%		-	-	70	mA
Standby Power Supply Current	ISB	#CS = VIH (min.) Cycle = min., Duty = 100%		-	-	3	mA
	ISB1	#CS ≥ VDD -0.2V	LL/LE	-	-	15	µA
			L	-	-	30	µA

Note: Typical characteristics are at VDD = 5V, TA = 25° C.

勝 特 力 材 料 886-3-5753170
胜特力电子(上海) 86-21-54151736
胜特力电子(深圳) 86-755-83298787
Http://www.100y.com.tw

CAPACITANCE

(V_{DD} = 5V, T_A = 25° C, f = 1 MHz)

PARAMETER	SYM.	CONDITIONS	MAX.	UNIT
Input Capacitance	C_{IN}	V_{IN} = 0V	6	pF
Input/Output Capacitance	$C_{I/O}$	V_{OUT} = 0V	8	pF

Note: These parameters are sampled but not 100% tested.

AC CHARACTERISTICS

AC Test Conditions

PARAMETER	CONDITIONS
Input Pulse Levels	0.6V to 2.4V
Input Rise and Fall Times	5 nS
Input and Output Timing Reference Level	1.5V
Output Load	C_L = 100 pF, I_{OH}/I_{OL} = -1 mA/4 mA

AC Test Loads and Waveform

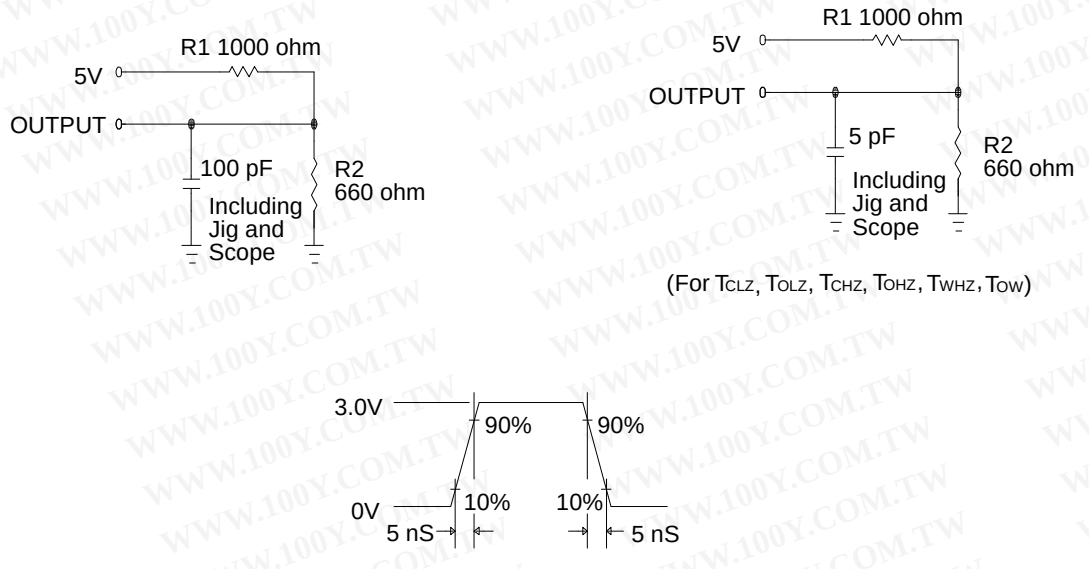

勝 特 力 材 料 886-3-5753170
胜特力电子(上海) 86-21-54151736
胜特力电子(深圳) 86-755-83298787
Http://www.100y.com.tw

AC Characteristics, continued

(V_{DD} = 5V ±10%, V_{SS} = 0V, T_A = 0 to 70° C for LL/L; -20 to 85° C for LE)

Read Cycle

PARAMETER	SYMBOL	W24257-70		UNIT
		MIN.	MAX.	
Read Cycle Time	T_{RC}	70	-	nS
Address Access Time	T_{AA}	-	70	nS
Chip Select Access Time	T_{ACS}	-	70	nS
Output Enable to Output Valid	T_{AOE}	-	35	nS
Chip Selection to Output in Low Z	T_{CLZ}*	10	-	nS
Output Enable to Output in Low Z	T_{OLZ}*	5	-	nS
Chip Deselection to Output in High Z	T_{CHZ}*	-	30	nS
Output Disable to Output in High Z	T_{OHZ}*	-	30	nS
Output Hold from Address Change	T_{OH}	10	-	nS

* These parameters are sampled but not 100% tested

Write Cycle

PARAMETER		SYMBOL	W24257-70		UNIT
			MIN.	MAX.	
Write Cycle Time		T_{WC}	70	-	nS
Chip Selection to End of Write		T_{CW}	60	-	nS
Address Valid to End of Write		T_{AW}	60	-	nS
Address Setup Time		T_{AS}	0	-	nS
Write Pulse Width		T_{WP}	45	-	nS
Write Recovery Time	#CS, #WE	T_{WR}	0	-	nS
Data Valid to End of Write		T_{DW}	30	-	nS
Data Hold from End of Write		T_{DH}	0	-	nS
Write to Output in High Z		T_{WHZ}*	-	30	nS
Output Disable to Output in High Z		T_{OHZ}*	-	30	nS
Output Active from End of Write		T_{OW}	0	-	nS

* These parameters are sampled but not 100% tested

勝 特 力 材 料 886-3-5753170
胜特力电子(上海) 86-21-54151736
胜特力电子(深圳) 86-755-83298787
Http://www.100y.com.tw

TIMING WAVEFORMS

Read Cycle 1

(Address Controlled)

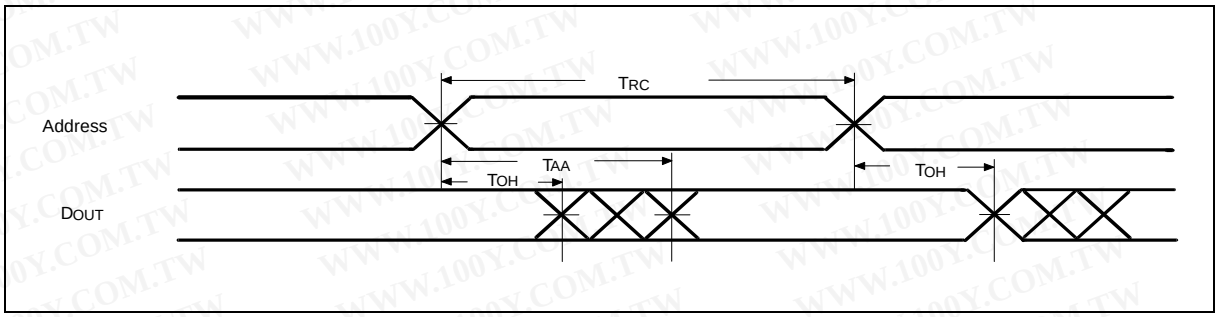

Read Cycle 2

(Chip Select Controlled)

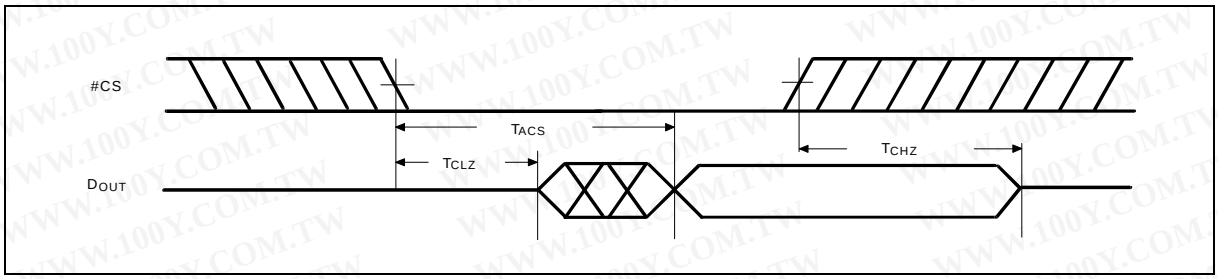

Read Cycle 3

(Output Enable Controlled)

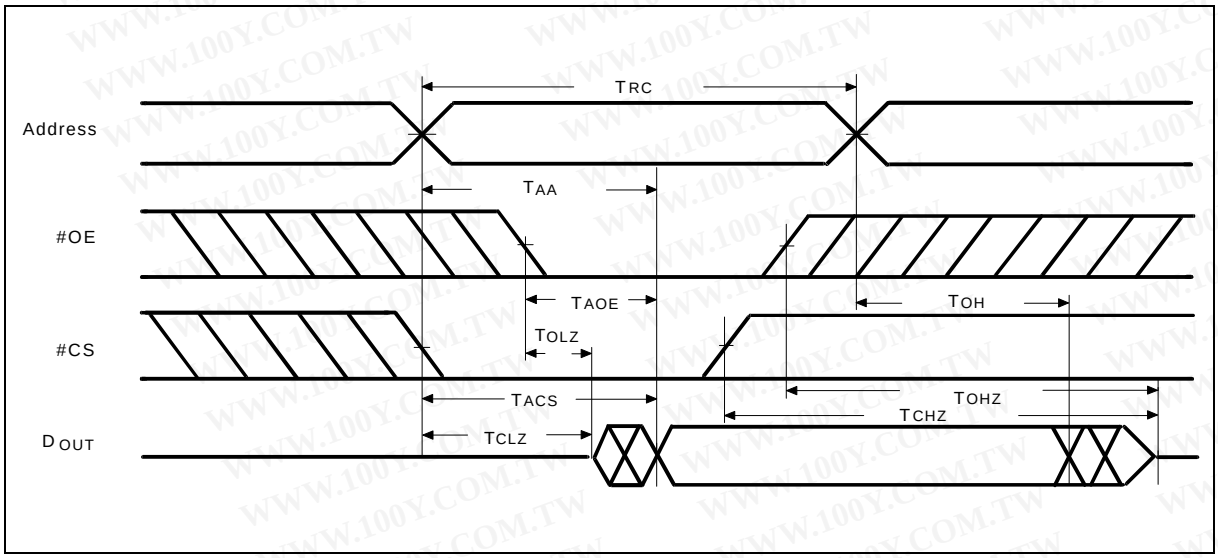

勝 特 力 材 料 886-3-5753170
胜特力电子(上海) 86-21-54151736
胜特力电子(深圳) 86-755-83298787
Http://www.100y.com.tw

Winbond Electronics Corp.

Timing Waveforms, continued

Write Cycle 1

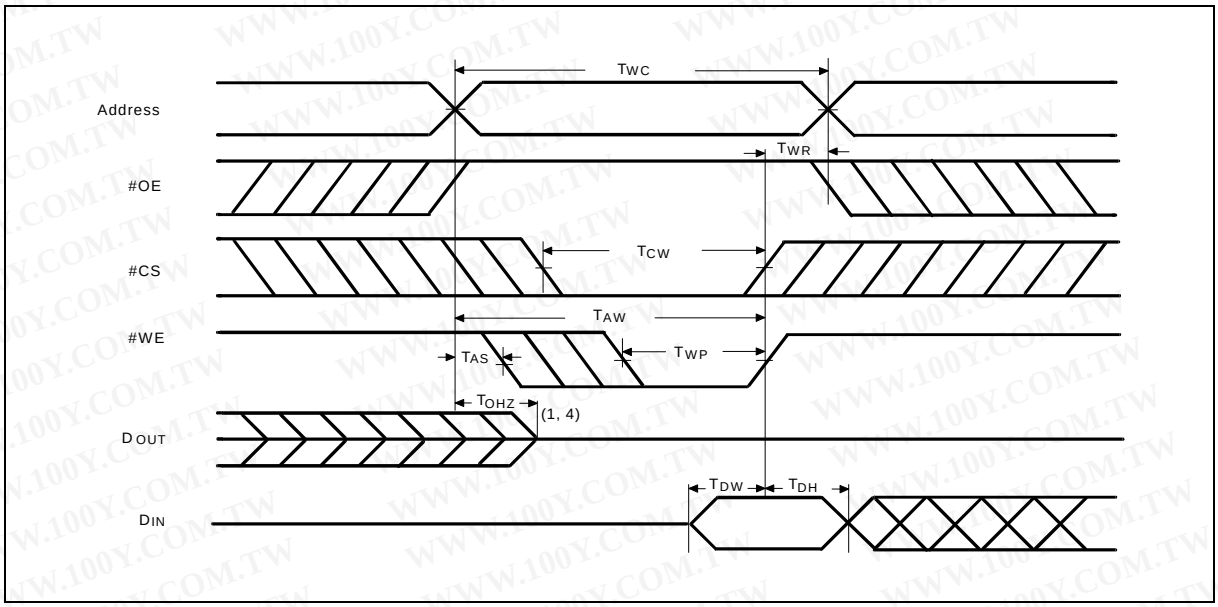

Write Cycle 2

($\overline{OE}$ = VIL Fixed)

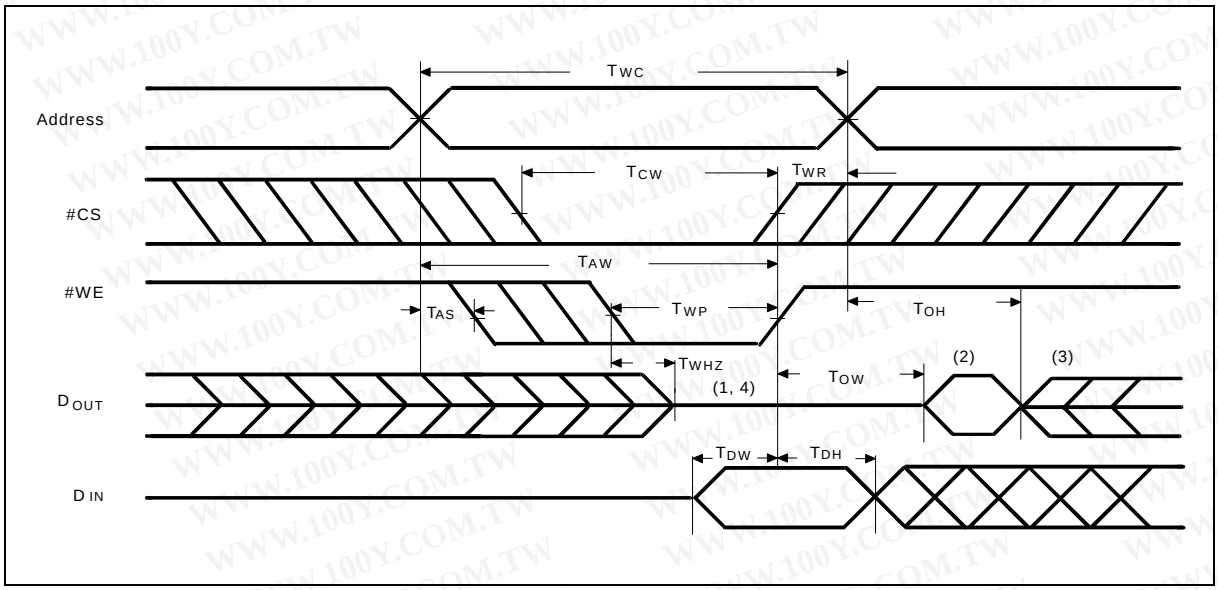

Notes:

1. During this period, I/O pins are in the output state, so input signals of opposite phase to the outputs should not be applied.
2. The data output from DOUT are the same as the data written to DIN during the write cycle.
3. DOUT provides the read data for the next address.
4. Transition is measured ±500 mV from steady state with CL = 5 pF. This parameter is guaranteed but not 100% tested.

勝 特 力 材 料 886-3-5753170
胜特力电子(上海) 86-21-54151736
胜特力电子(深圳) 86-755-83298787
Http://www.100y.com.tw

Winbond Electronics Corp.

DATA RETENTION CHARACTERISTICS

(T_A = 0 to 70° C for LL/L; -20 to 85° C for LE)

PARAMETER	SYM.	TEST CONDITIONS		MIN.	TYP.	MAX.	UNIT
V_{DD} for Data Retention	V_{DR}	#CS ≥ V_{DD} -0.2V		2.0	-	-	V
Data Retention Current	I_{DDDR}	#CS ≥ V_{DD} -0.2V	LL/LE	-	-	15	µA
		V_{DD} = 3V	L	-	-	30	µA
Chip Deselect to Data Retention Time	T_{CDR}	See data retention		0	-	-	nS
Operation Recovery Time	T_R	Waveform		T_{RC}*	-	-	nS

T_{RC}* = Read Cycle Time

DATA RETENTION WAVEFORM

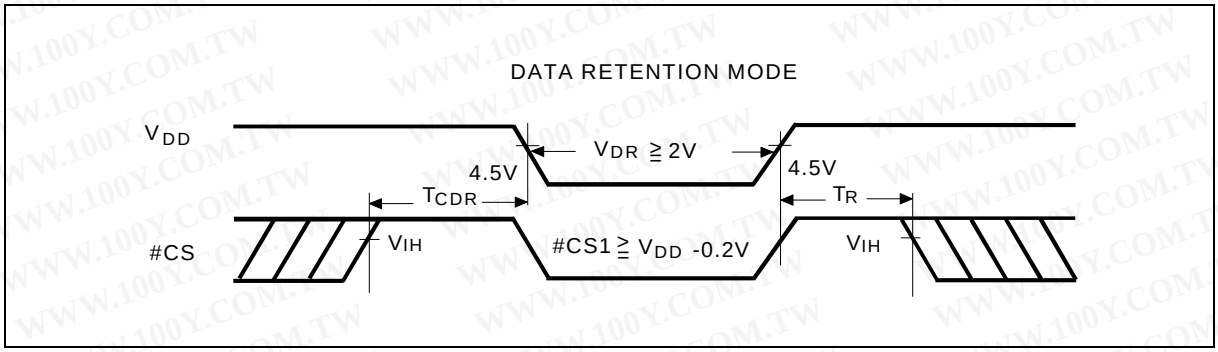

ORDERING INFORMATION

PART NO.	ACCESS TIME (nS)	OPERATING CURRENT MAX. (mA)	STANDBY CURRENT MAX. (mA)	OPERATING TEMP. (°C)	PACKAGE
W24257S-70LL	70	70	15	0 to 70	330 mil SOP
W24257S-70L	70	70	30	0 to 70	330 mil SOP
W24257S-70LE	70	70	15	-20 to 85	330 mil SOP
W24257Q-70LL	70	70	15	0 to 70	Standard type one TSOP
W24257Q-70L	70	70	30	0 to 70	Standard type one TSOP
W24257Q-70LE	70	70	15	-20 to 85	Standard type one TSOP

Notes:
1. Winbond reserves the right to make changes to its products without prior notice.
2. Purchasers are responsible for performing appropriate quality assurance testing on products intended for use in applications where personal injury might occur as a consequence of product failure.

勝 特 力 材 料 886-3-5753170
胜特力电子(上海) 86-21-54151736
胜特力电子(深圳) 86-755-83298787
Http://www.100y.com.tw

BONDING PAD DIAGRAM

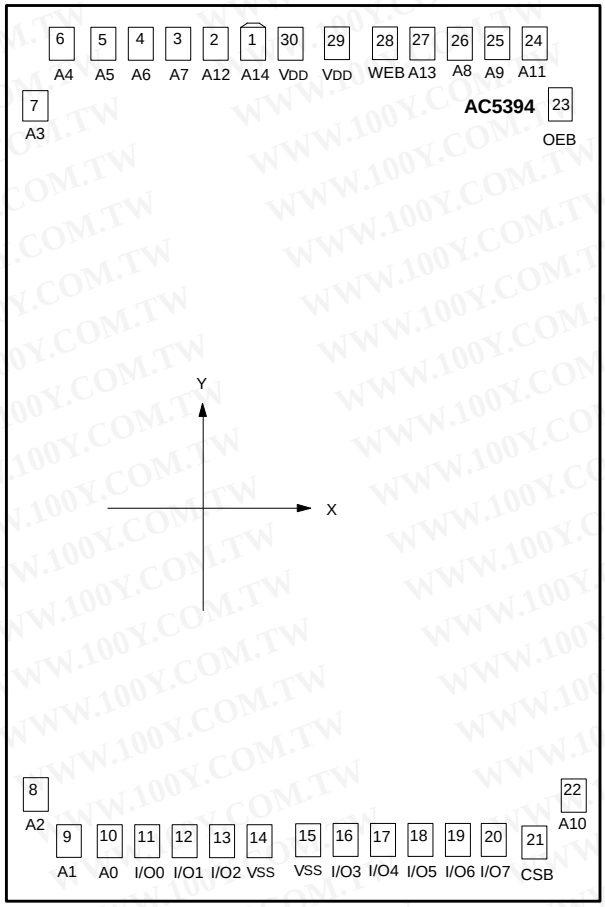

PAD NO.	X	Y
1	-232.25	1445.22
2	-351.70	1445.22
3	-471.15	1445.22
4	-590.60	1445.22
5	-710.05	1445.22
6	-829.50	1445.22
7	-992.79	1362.24
8	-992.79	-1306.11
9	-857.86	-1452.79
10	-738.41	-1452.79
11	-594.84	-1414.13
12	-451.06	-1414.13
13	-310.67	-1414.13
14	-171.78	-1405.28
15	24.45	-1405.28
16	151.80	-1414.13
17	298.07	-1414.13
18	443.28	-1414.13
19	588.20	-1414.13
20	732.84	-1414.13
21	871.11	-1452.79
22	992.75	-1312.15
23	992.75	1373.67
24	810.09	1445.22
25	690.64	1445.22
26	571.19	1445.22
27	451.74	1445.22
28	332.29	1445.22
29	120.25	1444.65
30	-93.23	1444.65

Note: For bare chip form (C.O.B.) applications, the substrate must be connected to V_{DD} or left floating in the PCB layout.

勝 特 力 材 料 886-3-5753170
胜特力电子(上海) 86-21-54151736
胜特力电子(深圳) 86-755-83298787
Http://www.100y.com.tw

PACKAGE DIMENSIONS

28-pin SO Wide Body

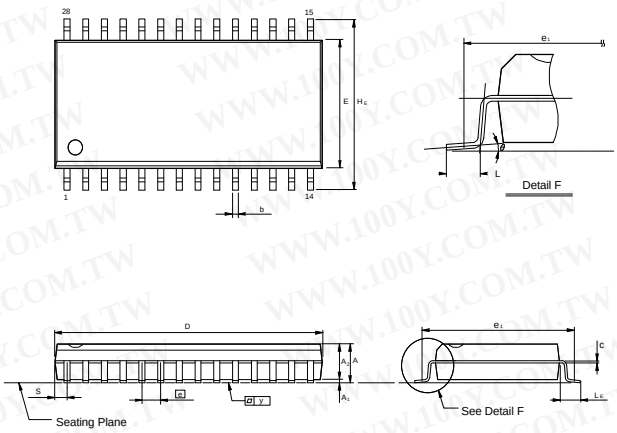

Symbol	Dimension in Inches			Dimension in mm		
	Min.	Nom.	Max.	Min.	Nom.	Max.
A	—	—	0.112	—	—	2.85
A_1	0.004	—	—	0.10	—	—
A_2	0.093	0.098	0.103	2.36	2.49	2.62
b	0.014	0.016	0.020	0.36	0.41	0.51
c	0.008	0.010	0.014	0.20	0.25	0.36
D	—	0.713	0.733	—	18.11	18.62
E	0.326	0.331	0.336	8.28	8.41	8.53
e	0.044	0.050	0.056	1.12	1.27	1.42
H_E	0.453	0.465	0.477	11.51	11.81	12.12
L	0.028	0.036	0.044	0.71	0.91	1.12
L_E	0.059	0.067	0.075	1.50	1.70	1.91
S	—	—	0.047	—	—	1.19
y	—	—	0.004	—	—	0.10
θ	0°	—	10°	0°	—	10°

Notes:
1. Dimension D Max. & S include mold flash or tie bar burrs.
2. Dimension b does not include dambar protrusion/intrusion.
3. Dimension D & E include mold mismatch and determined at the mold parting line.
4. Controlling dimension: Inches.
5. General appearance spec should be based on final visual inspection spec.

28-pin Standard Type One TSOP

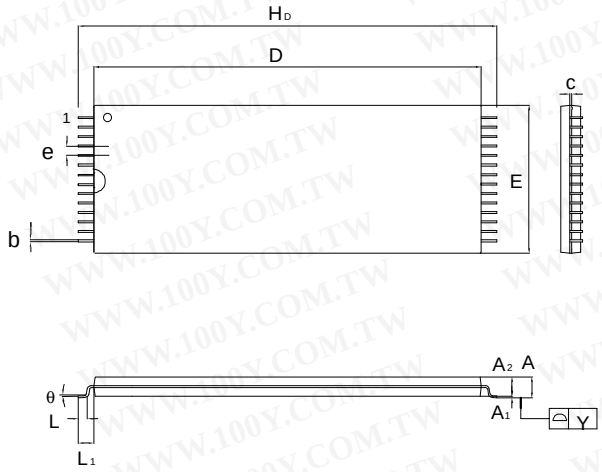

Symbol	Dimension In Inches			Dimension In mm		
	Min.	Nom.	Max.	Min.	Nom.	Max.
A			0.047			1.20
A_1	0.002		0.006	0.05		0.15
A_2	0.035	0.040	0.041	0.95	1.00	1.05
b	0.007	0.008	0.011	0.17	0.20	0.27
c	0.004	0.006	0.008	0.10	0.15	0.21
D	0.461	0.465	0.469	11.70	11.80	11.90
E	0.311	0.315	0.319	7.90	8.00	8.10
H_D	0.520	0.528	0.536	13.20	13.40	13.60
e		0.022			0.55	
L	0.020	0.024	0.028	0.50	0.60	0.70
L_1		0.010			0.25	
Y	0.000		0.004	0.00		0.10
θ	0	3	5	0	3	5

Controlling dimension: Millimeters

Winbond Electronics Corp.

VERSION HISTORY

VERSION	DATE	PAGE	DESCRIPTION
A12	Nov. 1999	1, 2, 7	Change the I_{DD}, I_{SB}, I_{SB1}
		4, 7	Remove the W24257-10 spc.
A13	Apr. 2000	7	Typo correction in Standby Current Max.: mA->µA
A14	May 2000	1, 7, 8	Delete 28-pin DIP Package
		8	Add in Bonding Pad Diagram
A15	Nov. 2000	2	Modify Operating Power Supply Current (I_{DD}) as 70 mA
		1	Add in TSOP Pin Configuration
A16	Feb. 2001	2, 4, 7	Add in LE grade

勝 特 力 材 料 886-3-5753170
胜特力电子(上海) 86-21-54151736
胜特力电子(深圳) 86-755-83298787
Http://www.100y.com.tw

Winbond Electronics Corp.

Headquarters
No. 4, Creation Rd. III,
Science-Based Industrial Park,
Hsinchu, Taiwan
TEL: 886-3-5770066
FAX: 886-3-5796096
http://www.winbond.com.tw/
Voice & Fax-on-demand: 886-2-27197006

Taipei Office
11F, No. 115, Sec. 3, Min-Sheng East Rd.,
Taipei, Taiwan
TEL: 886-2-27190505
FAX: 886-2-27197502

Winbond Electronics (H.K.) Ltd.
Unit 9-15, 22F, Millennium City,
No. 378 Kwun Tong Rd;
Kowloon, Hong Kong
TEL: 852-27513100
FAX: 852-27552064

Winbond Electronics North America Corp
Winbond Memory Lab.
Winbond Microelectronics Corp.
Winbond Systems Lab.
2727 N. First Street, San Jose,
CA 95134, U.S.A.
TEL: 408-9436666
FAX: 408-5441798

Note: All data and specifications are subject to change withou t notice.